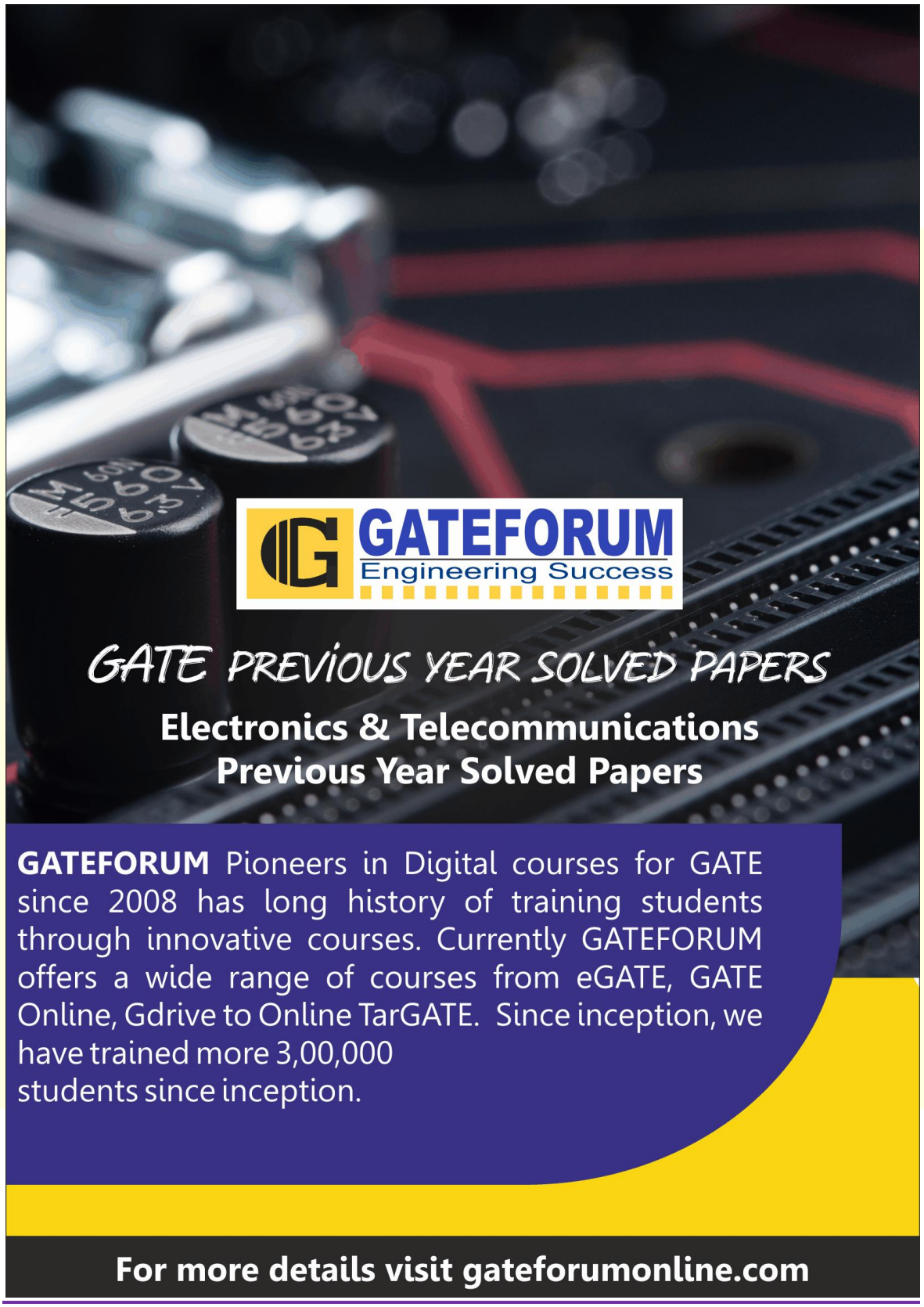

GENERAL APTITUDE

Q. No. 1 – 5 Carry One Mark Each

1. Find the missing sequence in the letter series below:

A, CD, GHI,?, UVWXY

(A) LMN (B) MNO (C) MNOP (D) NOPQ

Answer: (C)

2. Choose the correct verb to fill in the blank below:

Let us _____.

(A) Introvert (B) alternate (C) atheist (D) altruist

Answer: (B)

3. Choose the most appropriate word from the options given below to complete the following sentence?

If the athlete had wanted to come first in the race, he _____several hours every day.

(A) Should practice (B) Should have practiced

(C) Practiced (D) Should be practicing

Answer: (B)

4. Choose the most suitable one word substitute for the following expression

Connotation of a road or way

(A) Pertinacious (B) Viaticum

(C) Clandestine (D) Ravenous

Answer: (B)

5. If x>y>I, which of the following must be true?

(i) $\ln x > \ln y$ (ii) $e^x > e^y$ (iii) $y^x > x^y$ (iv) $\cos x > \cos y$

(A) (i) and (ii) (B) (i) and (iii)

(C) (iii) and (iv) (D) (ii) and (iv)

Answer: (A)

Q. No. 6 – 10 Carry Two Marks Each

6. From a circular sheet of paper of radius 30cm, a sector of 10% area is removed. If the remaining part is used to make a conical surface, then the ratio of the radius and height of the cone is _____.

Answer: (2.06)

7. In the following question, the first and the last sentence of the passage are in order and numbered 1 and 6. The rest of the passage is split into 4 parts and numbered as 2,3,4, and 5. These 4 parts are not arranged in proper order. Read the sentences and arrange them in a logical sequence to make a passage and choose the correct sequence from the given options.

1. One Diwali, the family rises early in the morning.

2. The whole family, including the young and the old enjoy doing this,

3. Children let off fireworks later in the night with their friends.

4. At sunset, the lamps are lit and the family performs various rituals

5. Father, mother, and children visit relatives and exchange gifts and sweets.

6. Houses look so pretty with lighted lamps all around.

(A) 2, 5, 3, 4 (B) 5, 2, 4, 3 (C) 3, 5, 4,2 (D) 4, 5, 2, 3

Answer: (B)

8. Ms. X will be in Bagdogra from 01/05/2014 to 20/05/2014 and from 22/05/2014 to 31/05/2014. On the morning of 21/05/204, she will reach Kochi via Mumbai

Which one of the statements below is logically valid and can be inferred from the above sentences?

(A) Ms. X will be in Kochi for one day, only in May

(B) Ms. X will be in Kochi for only one day in May

(C) Ms. X will be only in Kochi for one day in May

(D) Only Ms. X will be in Kochi for one day in May.

Answer: (B)

---

9. $\log \tan 1° + \log \tan 2° + ... + \log \tan 89°$ is .....

(A) 1 (B) $1/\sqrt{2}$ (C) 0 (D) –1

Answer: (C)

---

10. Ram and Shyam shared a secret and promised to each other that it would remain between them. Ram expressed himself in one of the following ways as given in the choices below. Identify the correct way as per standard English.

(A) It would remain between you and me.

(B) It would remain between I and you

(C) It would remain between you and I

(D) It would remain with me.

Answer: (A)

ELECTRONICS AND COMMUNICATION ENGINEERING

Q. No. 1 – 25 Carry One Mark Each

1. A coaxial cable is made of two brass conductors. The spacing between the conductors is filled with Teflon (ε_r= 2.1, tanδ = 0). Which one of the following circuits can represent the lumped element model of a small piece of this cable having length Δz?

(A)

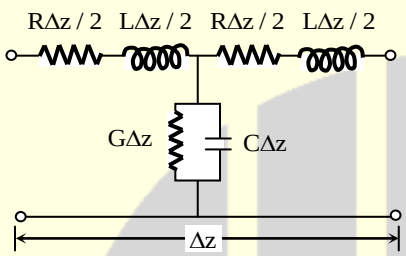

(B)

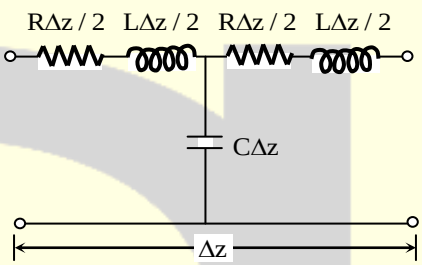

(C)

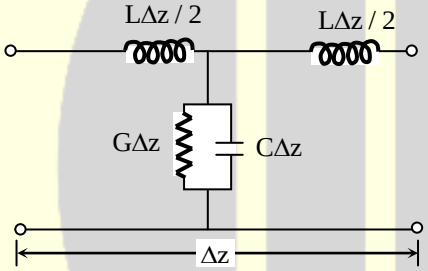

(D)

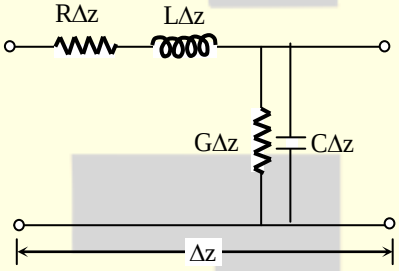

Answer: (B)

---

2. The phase margin (in degrees) of the system $G(s)=\dfrac{10}{s(s+10)}$ is _____ .

Answer: (84.32)

3. In the circuit shown, diodes D_1, D_2 and D_3 are ideal, and the inputs E_1, E_2 and E_3 are '0 V' for logic '0' and '10 V' for logic '1'. What logic gate does the circuit represent?

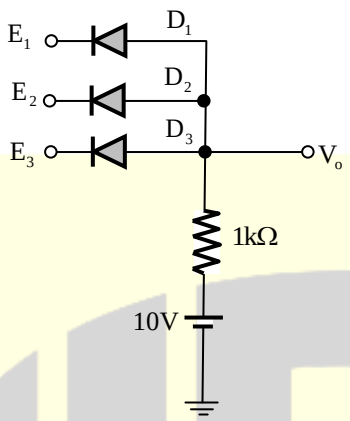

(A) 3 input OR gate (B) 3 input NOR gate

(C) 3 input AND gate (D) 3 input XOR gate

Answer: (C)

4. In the circuit shown in the figure, the BJT has a current gain (β) of 50.

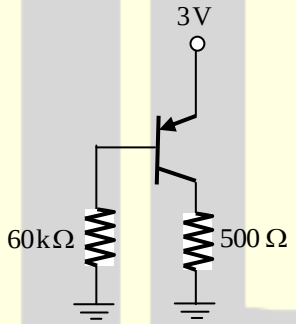

For an emitter base voltage V_{EB} = 600mV, the emitter collector voltage V_{EC} (in Volts) is _____.

Answer: (2)

5. The contour on the x-y plane, where the partial derivative of $x^2 + y^2$ with respect to y is equal to the partial derivative of 6y + 4x with respect to x, is

(A) y = 2 (B) x = 2 (C) x +y = 4 (D) x – y = 0

Answer: (A)

6. For $A = \begin{bmatrix} 1 & \tan x \\ -\tan x & 1 \end{bmatrix}$, the determinant of $A^T A^{-1}$ is

(A) $\text{Sec}^2 x$ (B) $\cos 4x$ (C) 1 (D) 0

Answer: (C)

---

7. In the circuit shown, the voltage Vx (in Volts) is_____.

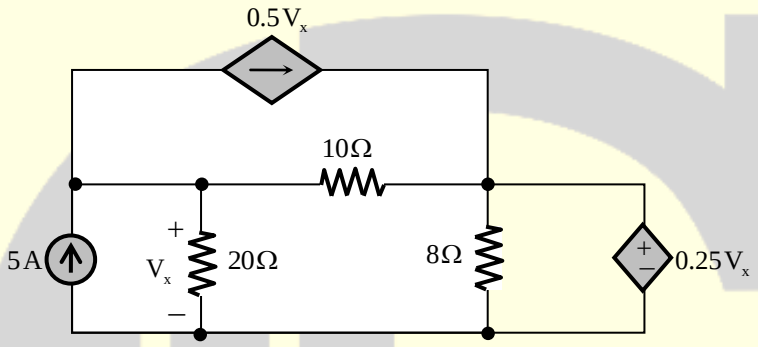

Answer: (8)

---

8. Which one of the following 8085 microprocessor programs correctly calculates the product of two 8-bit numbers stored in registers *B* and *C*?(Options)

(A)
```
MVI A, 00 H
JNZ LOOP
CMP C
LOOP DCR B
HLT
```

(B)
```
MVI, A, 00H
CMP C
LOOP DCR B
JNZ LOOP
HLT
```

(C)
```
MVI A, 00H
LOOP ADD C
DCR B
JNZ LOOP
HLT
```

(D)
```
MVI A, 00H
ADD C
JNZ LOOP
LOOP INR B
HLT
```

Answer: (C)

9. Consider the function $g(t) = e^{-t}\sin(2\pi t)\,u(t)$ where u(t) is the unit step function. The area under g(t) is _____.

Answer: (0.1552)

10. In the circuit shown using an ideal op amp, the 3-dB cut-off frequency (in Hz) is _____.

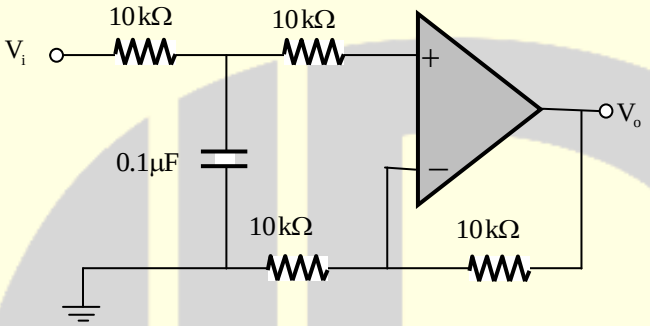

Answer: (159.15)

11. The modulation scheme commonly used for transmission from GSM mobile terminals is

(A) 4-QAM

(B) 16-PSK

(C) Walsh-Hadamard orthogonal codes

(D) Gaussian Minimum Shift Keying (GMSK)

Answer: (D)

12. Which one of the following processes is preferred to from the gate dielectric (SiO_2) of MOSFETs?

(A) Sputtering

(B) Molecular beam epitaxy

(C) Wet oxidation

(D) Dry oxidation

Answer: (D)

13. Consider the Bode plot shown in figure. Assume that all the poles and zeros are real valued.

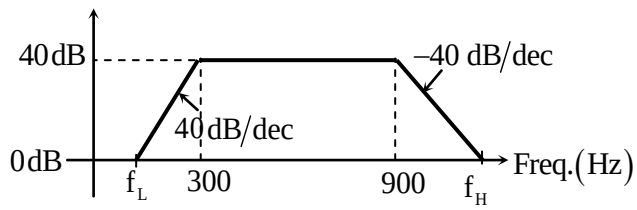

The value of $f_H - f_L$(in Hz) is _____.

Answer: (8970)

---

14. In the circuit shown, assume that diodes D_1 and D_2 are ideal. In the steady-state condition the average voltage V_{ab}(in Volts) across the 0.5 μF capacitor is _____.

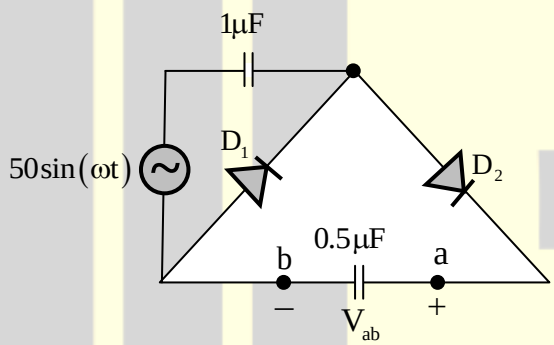

Answer: (100)

---

15. The transfer function of a first order controller is given as $G_C(s) = \frac{k(s+a)}{s+b}$ where, k, a and b are positive real numbers. The condition for this controller to act as a phase lead compensator is

(A) a < b (B) a > b (C) k < ab (D) k > ab

Answer: (A)

16. A message signal $m(t) = A_m\sin(2\pi f_m t)$ is used to modulate the phase of a carrier $A_c\cos(2\pi f_c t)$ to get the modulated signal $y(t) = A_c\cos(2\pi f_c t + m(t))$. The bandwidth of y(t)

(A) Depends on A_m but not on f_m

(B) Depends on f_m but not on A_m

(C) Depends on both A_m and f_m

(D) Does not depends on A_m or f_m

Answer: (C)

17. The directivity of an antenna array can be increased by adding more antenna elements, as a larger number of elements

(A) Improves the radiation efficiency

(B) Increases the effective area of the antenna

(C) Results in a better impedance matching

(D) Allows more power to be transmitted by the antenna

Answer: (B)

18. For the circuit shown in the figure, the Thevenin equivalent voltage (in Volts) across terminals a-b is _____.

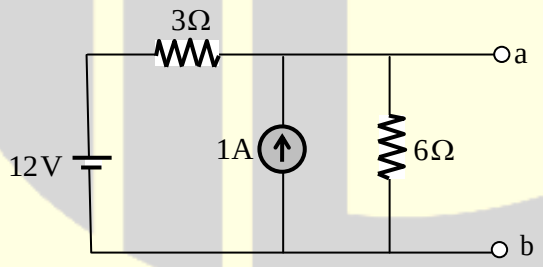

Answer: (10)

19. The impulse response of an LTI system can be obtained by

(A) Differentiating the unit ramp response

(B) Differentiating the unit step response

(C) integrating the unit ramp response

(D) integrating the unit step response

Answer: (B)

20. Consider a four point moving average filter defined by the equation $y[n]=\sum_{i=0}^{3}\alpha_i x[n-i]$. the condition on the filter coefficient that results in a null at zero frequency is

(A) $\alpha_1=\alpha_2=0;\alpha_0=-\alpha_3$

(B) $\alpha_1=\alpha_2=1;\alpha_0=-\alpha_3$

(C) $\alpha_0=\alpha_3=0;\alpha_1=\alpha_2$

(D) $\alpha_1=\alpha_2=0;\alpha_0=\alpha_3$

Answer: (A)

---

21. If C is a circle of radius r with centrez_0, in the complex z-plane and if n is a non-zero integer, then

$\oint \frac{dz}{(z-z_0)^{n+1}}$ equals

(A) $2\pi nj$ (B) 0 (C) $\frac{nj}{2\pi}$ (D) $2\pi n$

Answer: (B)

---

22. At very high frequencies, the peak output voltage V_0 (in Volts) is _____.

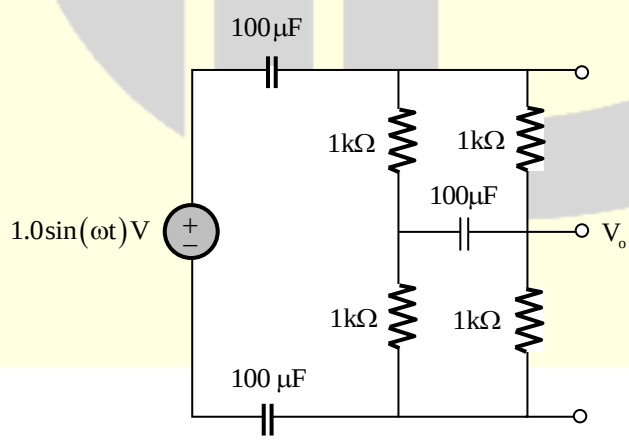

Answer: (0.5)

23. If the base width in a bipolar junction transistor is doubled, which one of the following statements will be TRUE?

(A) Current gain will increase

(B) Unity gain frequency will increase

(C) Emitter base junction capacitance will increase

(D) Early voltage will increase

Answer: (D)

---

24. The value of $\sum_{n-0}^{\infty} n\left(\frac{1}{2}\right)^n$ is____.

Answer: (2)

25. The circuit shown consists of J-K flip-flops, each with an active low asynchronous reset ($\overline{R_d}$ input). The counter corresponding to this circuit is

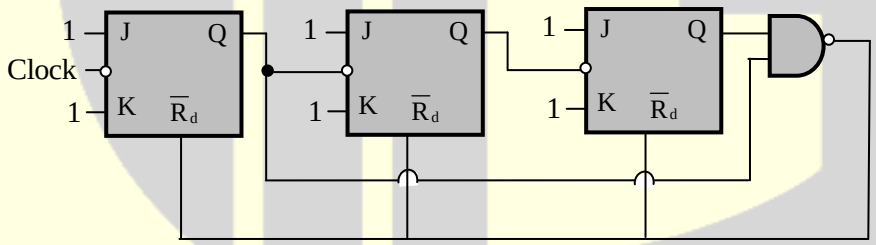

(A) a modulo-5 binary up counter

(B) a modulo-6 binary down counter

(C) a modulo-5 binary down counter

(D) a modulo-6 binary up counter

Answer: (A)

Q. No. 26 – 55 Carry Two Marks Each

26. A 200 m long transmission line having parameters shown in the figure is terminated into a load R_L. The line is connected to a 400 V source having source resistance R_S through a switch which is closed at $t = 0$.

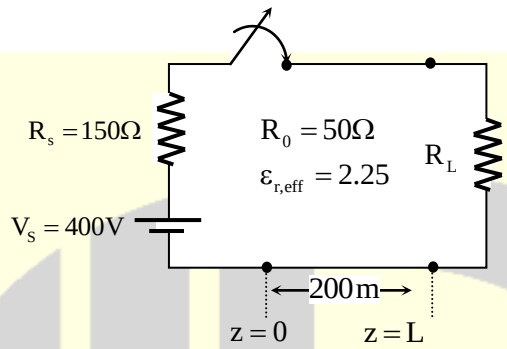

The transient response of the circuit at the input of the line ($z = 0$) is also drawn in the figure. The value of R_L (in Ω) is _____.

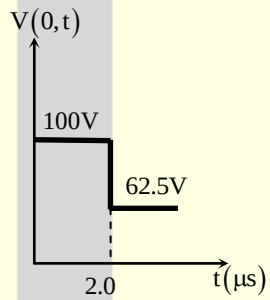

Answer: (30)

---

27. A coaxial capacitor of inner radius 1mm and outer radius 5mm has a capacitance per unit length of 172 pF/m. If the ratio of outer radius to inner is double, the capacitance per unit length (in pF/m) is _____.

Answer: (120.22)

28. A universal logic gate can implement any Boolean function by connecting sufficient number of them appropriately. Three gates are shown.

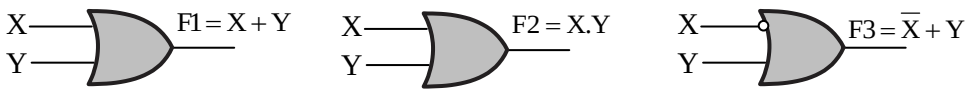

Which one of the following statements is TRUE?

(A) Gate 1 is a universal gate.

(B) Gate 2 is a universal gate.

(C) Gate 3 is a universal gate.

(D) None of the gates shown is a universal gate.

Answer: (C)

---

29. The Newton-Raphson method is used to solve the equation $f(x) = x^3 - 5x^2 + 6x - 8 = 0$. Taking the initial guess as $x = 5$, the solution obtained at the end ofthe first iteration is_____.

Answer: (4.2903)

---

30. A random binary wave $y(t)$ is given by $y(t) = \sum_{n=-\infty}^{\infty} X_n p(t - nT - \phi)$, where $p(t) = u(t) - u(t - T)$, $u(t)$ is the unit step function and ϕ is an independent random variable with uniform distribution in $[0, T]$. The sequence $\{X_n\}$ consists of independent and identically distributed binary valued random variables with $P\{X_n = +1\} = P\{X_n = -1\} = 0.5$ for each n.

The value of the auto correlation $R_{yy}\left(\frac{3T}{4}\right) \triangleq E\left[y(t)y\left(t - \frac{3T}{4}\right)\right]$ equals _____.

Answer: (0.25)

31. A three bit pseudo random number generator is shown. Initially the value of output $Y = Y_2Y_1Y_0$ is set to 111. The value of output Y after three clock cycles is

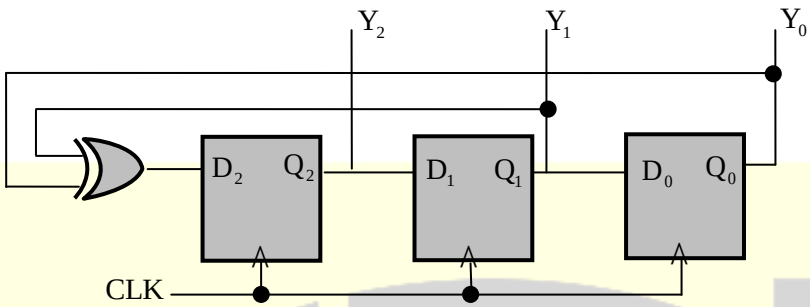

(A) 000 (B) 001 (C) 010 (D) 100

Answer: (D)

32. In the circuit shown, assume that the op amp is ideal.

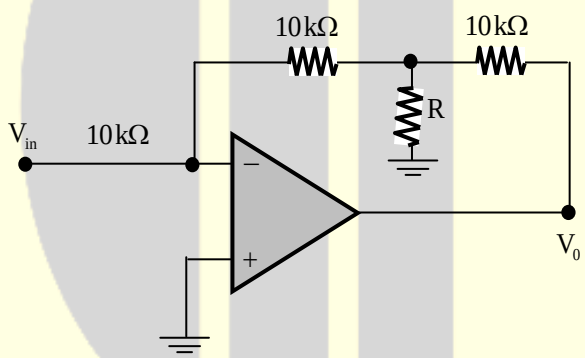

If the gain (V_0/V_{in}) is –12, the value of R (in kΩ) is _____.

Answer: (1)

33. Two sequences $x_1[n]$ and $x_2[n]$ have the same energy. Suppose $x_1[n] = \alpha 0.5^n u[n]$, where α is a positive real number and u[n] is the unit step sequence. Assume

$$x_2[n] = \begin{cases} \sqrt{1.5} & \text{for } n = 0,1 \\ 0 & \text{otherwise} \end{cases}$$

Then the value of α is _____.

Answer: (1.5)

34. The ABCD parameters of the following 2-port network are

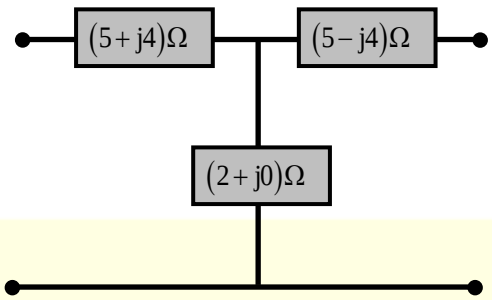

(A) $\begin{bmatrix} 3.5+j2 & 20.5 \\ 20.5 & 3.5-j2 \end{bmatrix}$

(B) $\begin{bmatrix} 3.5+j2 & 0.5 \\ 0.5 & 3.5-j2 \end{bmatrix}$

(C) $\begin{bmatrix} 10 & 2+j0 \\ 2+j0 & 10 \end{bmatrix}$

(D) $\begin{bmatrix} 7+j4 & 0.5 \\ 30.5 & 7-j4 \end{bmatrix}$

Answer: (B)

---

35. A network is described by the state model as

$$\dot{x}_1 = 2x_1 - x_2 + 3u$$
$$\dot{x}_2 = -4x_2 - u$$
$$y = 3x_1 - 2x_2$$

The transfer function $H(s) = \left(\frac{Y(s)}{U(s)}\right)$ is

(A) $\frac{11s+35}{(s-2)(s+4)}$ (B) $\frac{11s-35}{(s-2)(s+4)}$ (C) $\frac{11s+38}{(s-2)(s+4)}$ (D) $\frac{11s-38}{(s-2)(s+4)}$

Answer: (A)

36. In the circuit shown, the current I flowing through the 50 Ω resistor will be zero if the value of capacitor C (in μF) is_____.

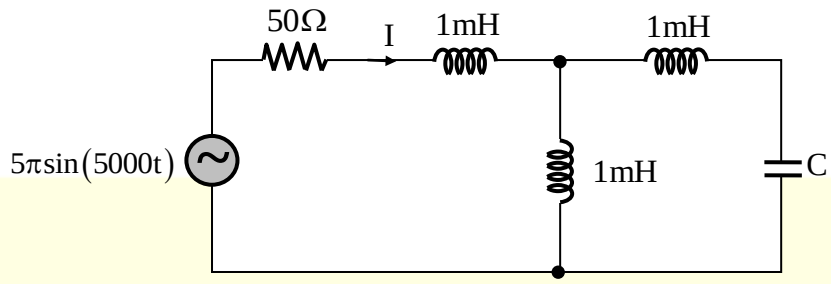

Answer: (20)

37. A realization of a stable discrete time system is shown in figure. If the system is excited by a unit step sequence input x[n], the response y[n] is

(A) $4\left(-\frac{1}{3}\right)^n u[n]-5\left(-\frac{2}{3}\right)^n u[n]$

(B) $5\left(-\frac{2}{3}\right)^n u[n]-3\left(-\frac{1}{3}\right)^n u[n]$

(C) $5\left(\frac{1}{3}\right)^n u[n]-5\left(\frac{2}{3}\right)^n u[n]$

(D) $5\left(\frac{2}{3}\right)^n u[n]-5\left(\frac{1}{3}\right)^n u[n]$

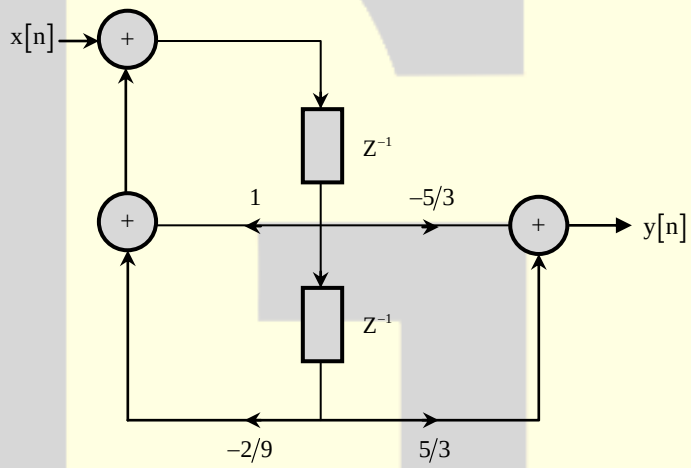

Answer: (C)

38. The complex envelope of the bandpass signal $x(t) = -\sqrt{2}\left(\frac{\sin(\pi t/5)}{\pi t/5}\right)\sin\left(\pi t-\frac{\pi}{4}\right)$, centered about $f = 1/2$ Hz is

(A) $\left(\frac{\sin(\pi t/5)}{\pi t/5}\right)e^{j\frac{\pi}{4}}$

(B) $\left(\frac{\sin(\pi t/5)}{\pi t/5}\right)e^{-j\frac{\pi}{4}}$

(C) $\sqrt{2}\left(\frac{\sin(\pi t/5)}{\pi t/5}\right)e^{j\frac{\pi}{4}}$

(D) $\sqrt{2}\left(\frac{\sin(\pi t/5)}{\pi t/5}\right)e^{-j\frac{\pi}{4}}$

Answer: (C)

39. In the circuit shown, assume that the diodes D_1 and D_2 are ideal. The average value of voltage V_{ab}(in Volts), across terminals 'a' and 'b' is _____.

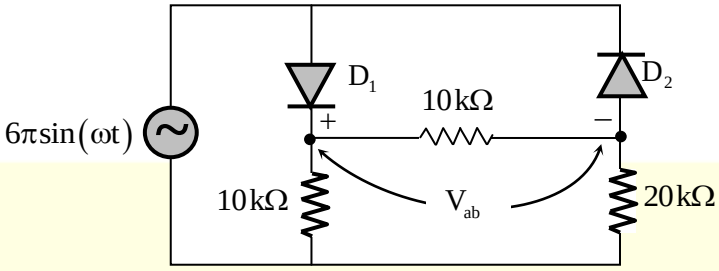

Answer: (5)

40. Consider the differential equation

$$\frac{d^2x(t)}{dt^2}+3\frac{dx(t)}{dt}+2x(t)=0.$$

Given x(0) = 20 and x(1) = 10/e, where e = 2.718. The value of x(2) is_____

Answer: (0.86)

41. Let $\hat{x}[n]=1+\cos\left(\frac{\pi n}{8}\right)$ be a periodic signal with period 16. DFS coefficients are defined by $a_k=\frac{1}{16}\sum_{n=0}^{15}\hat{x}[n]\exp\left(-j\frac{\pi}{8}kn\right)$ for all k. The value of the coefficient a_{31} is _____

Answer: (0.5)

42. A fair die with faces {1, 2, 3, 4, 5, 6} is thrown repeatedly till '3' is observed for the first time. Let X denote the number of times the die is thrown. The expected value of X is _____.

Answer: (6)

43. The electric field profile in the depletion region of a *p-n* junction in equilibrium is shown in the figure. Which one of the following statements is NOT TRUE?

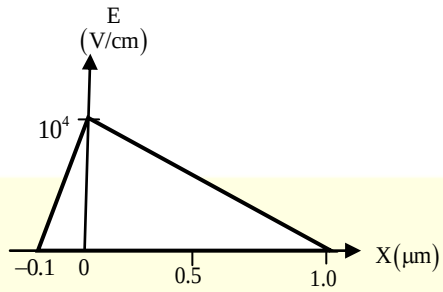

(A) The left side of the junction is n-type and the right side is p-type

(B) Both the n-type and p-type depletion regions are uniformly doped

(C) The potential difference across the depletion region is 700 mV

(D) If the p-type region has a doping concentration of 10^{15} cm^{-3}, then the doping concentration in the n-type region will be 10^{16} cm^{-3}

Answer: (C)

---

44. A vector field $D = 2\rho^2 a_\rho + z\, a_z$ exists inside a cylindrical region enclosed by the surfaces $\rho = 1$, $z = 0$ and $z = 5$. Let Sbe the surface bounding this cylindrical region. The surface integral of this field on S $\left(\oiint_s D.ds\right)$ is _____.

Answer: (78.54)

---

45. An n-p-n BJT having reverse saturation current $I_s = 10^{-15}$ A is biased in the forward active region with V_{BE} = 700 mV. The thermal voltage (V_T) is 25 mV and the current gain (β) may vary from 50 to 150 due to manufacturing variations. The maximum emitter current (in μA) is _____.

Answer: (1475)

---

46. Consider the 3 m long lossless air-filled transmission line shown in the figure. It has a characteristic impedance of 120π Ω, is terminated by a short circuit, and is excited with a frequency of 37.5 MHz. What is the nature of the input impedance (Z_{in})?

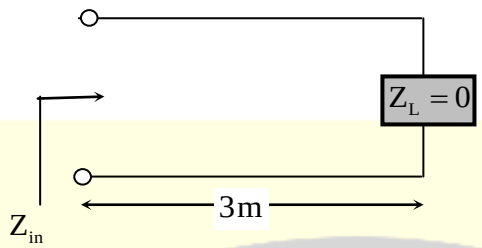

(A) Open (B) Short (C) Inductive (D) Capacitive

Answer: (D)

---

47. The current in an enhancement mode NMOS transistor biased in saturation mode was measured to be 1 mA at a drain-source voltage of 5 V. When the drain-source voltage was increased to 6 V while keeping gate-source voltage same, the drain current increased to 1.02 mA. Assume that drain to source saturation voltages is much smaller than the applied drain-source voltage. The channel length modulation parameter λ (in V^{-1}) is _____.

Answer: (0.022)

---

48. For the system shown in figure, $s = -2.75$ lies on the root locus if k is_____.

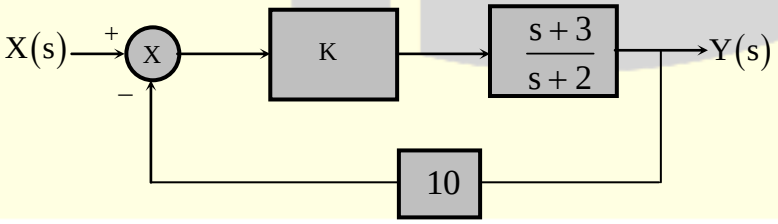

Answer: (0.3)

49. An SR latch is implemented using TTL gates as shown in the figure.

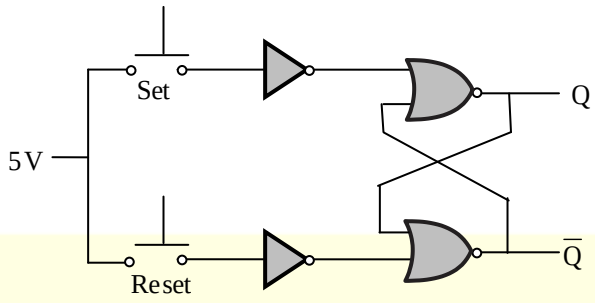

The set and reset pulse inputs are provided using the push-button switches. It is observed that the circuit fails to work as desired. The SR latch can be made functional by changing

(A) NOR gates to NAND gates

(B) Inverters to buffers

(C) NOR gates to NAND gates and inverters to buffers

(D) 5 V to ground

Answer: (D)

---

50. The variance of the random variable X with probability density function $f(x)=\frac{1}{2}|x|e^{-|x|}$ is _____

Answer: (6)

---

51. Consider a continuous-time signal defined as

$$x(t)=\left(\frac{\sin(\pi t/2)}{(\pi t/2)}\right)*\sum_{n=-\infty}^{\infty}\delta(t-10n)$$

Where '*' denotes the convolution operation and t is in seconds. The Nyquist sampling rate (in samples/sec) for x(t) is _____.

Answer: (0.4)

52. In the circuit shown, both the enhancement mode NMOS transistors have the following characteristics: $k_n = \mu_n C_{ox}(W/L) = 1\ mA/V^2$; $V_{TN} = 1V$.

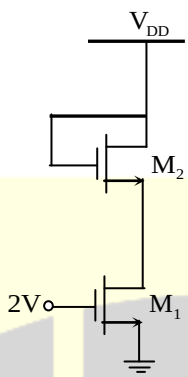

Assume that the channel length modulation parameter λ is zero and body is shorted to source. The minimum supply voltage V_{DD}(in volts) needed to ensure that transistor M_1 operates in saturation mode of operation is _____.

Answer: (3)

---

53. The position control of a DC servo-motor is given in the figure.

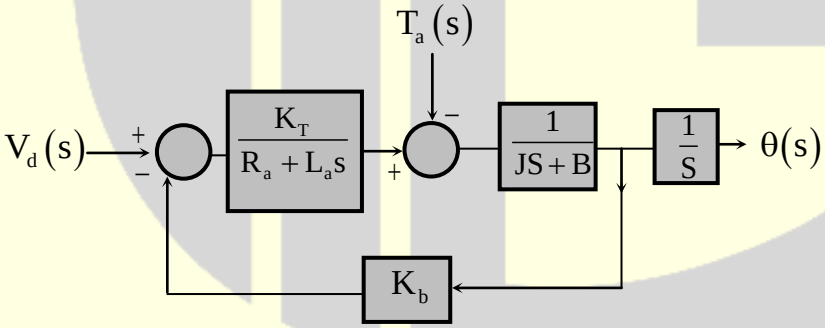

The values of the parameters are $K_T = 1$ N-m A, $R_a = 1\ \Omega$, $L_a = 0.1H$. J= 5 kg-m^2, B= 1 N-m (rad/sec) and $K_b = 1$ V/(rad/sec). The steady-state position response (in radians) due to unit impulse disturbance torque $T_d$is _____.

Answer: (–0.5)

54. The characteristic equation of an LTI system is given by $F(s) = s^5 + 2s^4 + 3s^3 + 6s^2 - 4s - 8 = 0$. The number of roots that lie strictly in the left half s-plane is _____.

Answer: (2)

55. Suppose x[n] is an absolutely summable discrete-time signal. Its z-transform is a rational function with two poles and two zeroes. The poles are at $z = \pm 2j$. Which one of the following statements is TRUE for the signal x[n]?

(A) It is a finite duration signal

(B) It is a causal signal

(C) It is a non-causal signal

(D) It is a periodic signal

Answer: (C)