GENERAL APTITUDE

Q. No. 1 – 5 Carry One Mark Each

1. The chairman requested the aggrieved shareholders to _____him.

(A) bare with (B) bore with (C) bear with (D) bare

Answer: (C)

2. Identify the correct spelling out of the given options:

(A) Managable (B) Manageable (C) Manageble (D) Managible

Answer: (B)

3. Pick the odd one out in the following

13, 23, 33, 43, 53

(A) 23 (B) 33 (C) 43 (D) 53

Answer: (B)

4. R2D2 is a robot. R2D2 can repair aeroplanes. No other robot can repair aeroplanes.

Which of the following can be logically inferred from the above statements?

(A) R2D2 is a robot which can only repair aeroplanes.

(B) R2D2is the only robot which can repair aeroplanes.

(C) R2D2 is a robot which can repair only aeroplanes.

(D) Only R2D2 is a robot.

Answer: (B)

5. If $|9y-6|=3$, then $y^2-4y/3$ is _____.

(A) 0 (B) $+1/3$ (C) $-1/3$ (D) undefined

Answer: (C)

Q. No. 6 – 10 Carry Two Mark Each

6. The following graph represents the installed capacity for cement production (in tones) and the actual production (in tones) of nine cement plants of a cement company Capacity utilization of a plant is defined as ratio of actual production of cement to installed capacity. A plant with installed capacity of at least 200 tonnes is called a large plant and a plant with lesser capacity is called a small plant. The difference between total production of large plants and small plants, in tones is

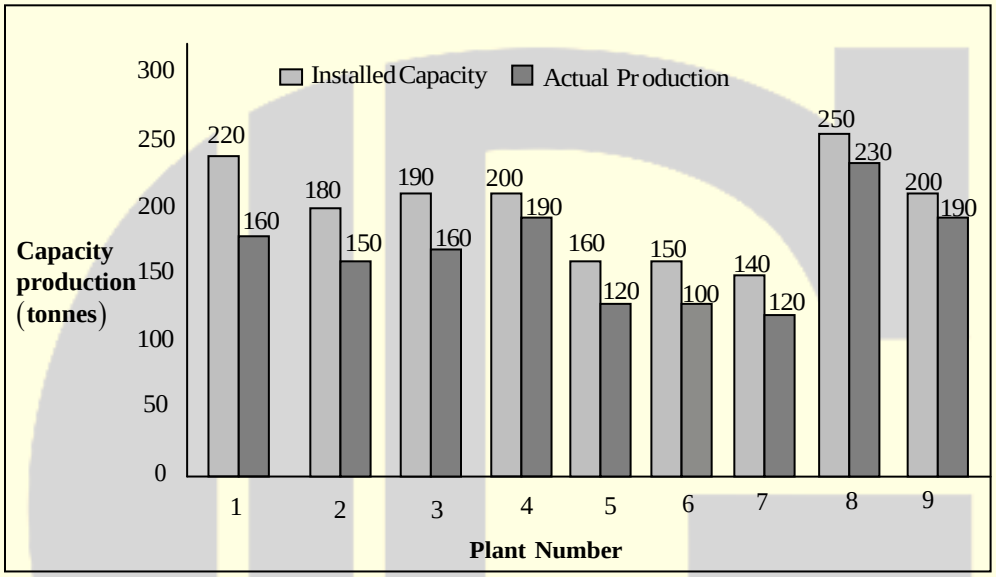

Answer: (120)

7. A poll of students appearing for masters in engineering indicated that 60% of the students believed that mechanical engineering is a profession unsuitable for women. A research study on women with master or higher degrees in mechanical engineering found that 99% of such women were successful in their professions.

Which of the following can be logically inferred from the above paragraph?

(A) Many students have isconceptions regarding various engineering disciplines

(B) Men with advanced degrees in mechanical engineering believe women are well suited to be mechanical engineers.

(C) Mechanical engineering is a profession well suited for women with masters or higher degrees in mechanical engineering.

(D) The number of women pursuing high degrees in mechanical engineering is small.

Answer: (C)

8. Sourya committee had proposed the establishment of Sourya Institutes of Technology (SITs) in line with Indian Institutes of Technology (IITs) to cater to the technological and industrial needs of a developing country.

Which of the following can be logically inferred from the above sentence?

Based on the proposal,

(i) In the initial years, SIT students will get degrees from IIT.

(ii) SITs will have a distinct national objective

(iii) SIT like institutions can only be established in consultation with IIT.

(iv) SITs will serve technological needs of a developing country.

(A) (iii) and (iv) only (B) (i) and (iv) only

(C) (ii) and (iv) only (D) (ii) and (iii) only

Answer: (C)

---

9. Shaquille O' Neal is a 60% career free throw shooter, meaning that he successfully makes 60 free throws out of 100 attempts on average. What is the probability that he will successfully make exactly 6 free throws in 10 attempts?

(A) 0.2508 (B) 0.2816 (C) 0.2934 (D) 0.6000

Answer: (A)

---

10. The numeral in the units position of $211^{870} + 146^{127} \times 3^{424}$ is _____.

Answer: (7)

ELECTRICAL ENGINEERING

Q. No. 1 – 25 Carry One Mark Each

1. The output expression for the Karnaugh map shown below is

A \ BC	00	01	11	10
0	1	0	0	1
1	1	1	1	1

(A) $A+\bar{B}$ (B) $A+\bar{C}$ (C) $\bar{A}+\bar{C}$ (D) $\bar{A}+C$

Answer: (B)

2. The circuit shown below is an example of a

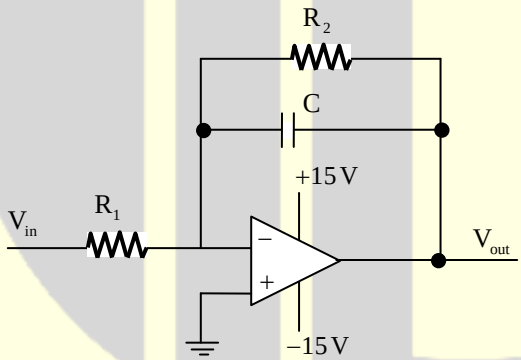

(A) low pass filter (B) band pass filter

(C) high pass filter (D) notch filter

Answer: (A)

3. The following figure shows the connection of an ideal transformer with primary to secondary turns ratio of 1:100.

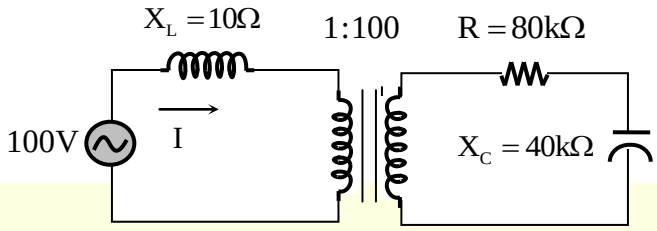

The applied primary voltage is 100V (rms), 50Hz, AC. The rms value of the current I, in ampere, is _____.

Answer: (10)

---

4. Consider a causal LTI system characterized by differential equation $\frac{dy(t)}{dt} + \frac{1}{6}y(t) = 3x(t)$. The response of the system to input $x(t) = 3e^{-\frac{1}{3}}u(t)$, where u(t) denotes the unit step function, is

(A) $9e^{-\frac{t}{3}}u(t)$

(B) $9e^{-\frac{t}{6}}u(t)$

(C) $9e^{-\frac{t}{3}}u(t) - 6e^{-\frac{t}{6}}u(t)$

(D) $54e^{-\frac{t}{6}}u(t) - 54e^{-\frac{t}{3}}u(t)$

Answer: (D)

---

5. Suppose the maximum frequency in a band-limited signal x(t) is 5kHz. Then, the maximum frequency in $x(t)\cos(2000\pi t)$, in kHz, is _____.

Answer: (6)

---

6. Consider the function $f(z) = z + z^*$ where z is a complex variable and z* denotes its complex conjugate. Which one of the following is TRUE?

(A) f(z) is both continuous and analytic

(B) f(z) is both continuous but not analytic

(C) f(z) is not continuous but is analytic

(D) f(z) is neither continuous not analytic

Answer: (B)

7. A 3×3 matrix P is such that, $P^3 = P$. Then the eigenvalues of P are

(A) 1, 1, - 1

(B) $1, 0.5 + j0.866, 0.5 - j0.866$

(C) $1, -0.5 + j0.866, 0.5 - j0.866$

(D) 0, 1, - 1

Answer: (D)

---

8. The solution of the differential equation, for $t > 0$, $y''(t) + 2y'(t) + (y)(t) = 0$ with initial conditions $y(0) = 0$ and $y'(0) = 1$, is (u(t) denotes the unit step function),

(A) $te^{-t}u(t)$

(B) $e^{-t} - te^{-t}u(t)$

(C) $(-e^{-t} + te^{-t})u(t)$

(D) $e^{-t}u(t)$

Answer: (A)

---

9. The value of the line integral $\int_c (2xy^2dx + 2x^2ydy + dz)$ along a path joining the origin (0,0,0) and the point (1,1,1) is

(A) 0

(B) 2

(C) 4

(D) 6

Answer: (B)

---

10. Let f(x) be a real, periodic function satisfying $f(-x) = -f(x)$. The general form of its Fourier series representation would be

(A) $f(x) = a_0 + \sum_{k=1}^{\infty} a_k \cos(kx)$

(B) $f(x) = \sum_{k=1}^{\infty} b_k \sin(kx)$

(C) $f(x) = a_0 + \sum_{k=1}^{\infty} a_{2k} \cos(kx)$

(D) $f(x) = \sum_{k=0}^{\infty} a_{2k+1} \sin(2k+1)x$

Answer: (B)

11. A resistance and a coil are connected in series and supplied from a single phase, 100V, 50 Hz ac source as shown in the figure below.

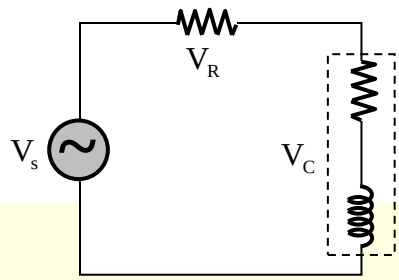

The rms values of possible voltage across the resistance (V_R) and coil (V_C) respectively, in volts, are

(A) 65, 35 (B) 50, 50 (C) 60, 90 (D) 60, 80

Answer: (C)

12. The voltage (V) and current (A) across a load are as follows:

$$v(t) = 100\sin\omega t$$
$$i(t) = 10\sin(\omega t - 60) + 2\sin(3\omega t) + 5\sin(5\omega t)$$

The average power consumed by the load in W is _____.

Answer: (250)

13. A power system with two generators is shown in the figure below. The system (generators, buses and transmission lines) is protected by six overcurrent relays R_1 to R_6.

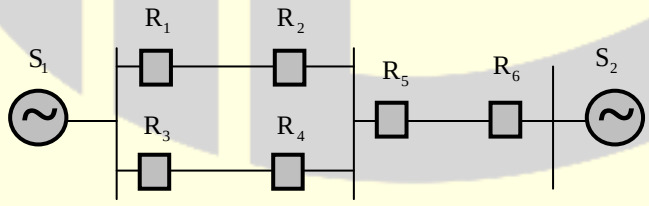

Assuming a mix of directional and nondirectional relays at appropriate locations, the remote backup relays for R_4 are

(A) R_1, R_2 (B) R_2, R_6 (C) R_2, R_5 (D) R_1, R_6

Answer: (D)

14. A power system has 100 buses including 10 generator buses. For the load flow analysis using Newton-Raphson method in polar coordinates, the size of the Jacobian is

(A) 189×189 (B) 100×100

(C) 90×90 (D) 180×180

Answer: (A)

15. The inductance and capacitance of a 400kV. Three-phase. 50Hz lossless transmission line are 1.6 mH/km/phase and $10\,\text{nF/km/phase}$ respectively. The sending end voltage is maintained at 400kV. To maintain a voltage of 400kV at the receiving end, when the line is delivering 300MW load, the shunt compensation required is

(A) Capacitive (B) Inductive (C) Resistive (D) Zero

Answer: (B)

16. A parallel plate capacitor filled with two dielectrics is shown in the figure below. If the electric field in the region A is 4kV/cm, the electric field in the region B, in kV/cm, is

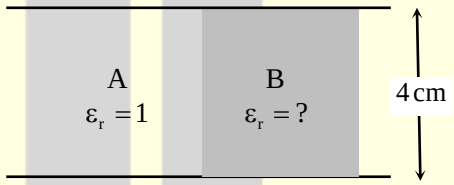

(A) 1 (B) 2 (C) 4 (D) 16

Answer: (C)

17. A 50MVA, 10kV, 50Hz, star-connected, unloaded three-phase alternator has a synchronous reactance of 1 p.u. and a sub-transient reactance of 0.2 p.u. If a 3-phase short circuit occurs close to the generator terminals, the ratio of initial and final values of the sinusoidal component of the short circuit current is _____.

Answer: (5)

18. Consider a liner time-invariant system transfer function $H(s)=\frac{1}{(s+1)}$. If the input is cos(t) and the steady state output is $A\cos(t+\alpha)$, then the value of A is _____.

Answer: (0.707)

19. A three-phase diode bridge rectifier is feeding a constant DC current of 100A to a highly inductive load. If three-phase, 415V, 50Hz AC source is supplying to this bridge rectifier then the rms value of the current in each diode, in ampere, is _____.

Answer: (57.73)

20. A buck-boost DC-DC converter shown in the figure below, is used to convert 24 V battery voltage to 36 V DC voltage to feed a load of 72 W.

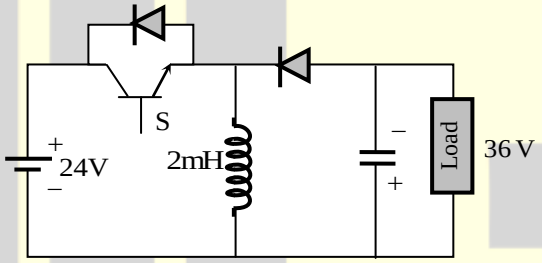

It is operated at 20kHz with an inductor of 2 mH and output capacitor of 1000 μF. All devices are considered to be ideal. The peak voltage across the solid-state switch (S), in volt, is _____.

Answer: (60)

21. For the network shown in the figure below,

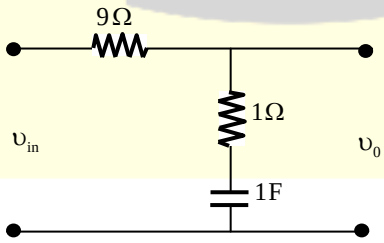

the frequency (in rad/s) at which the maximum phase lag occurs is._____.

Answer: (0.316)

22. The direction of rotation of a single-phase capacitor run induction motor is reversed by

(A) interchanging the terminals of the AC supply

(B) interchanging the terminals of the capacitor

(C) interchanging the terminals of the auxiliary winding.

(D) interchanging the terminals of both the windings

Answer: (C)

23. In the circuit shown above, the voltage and current sources are ideal.

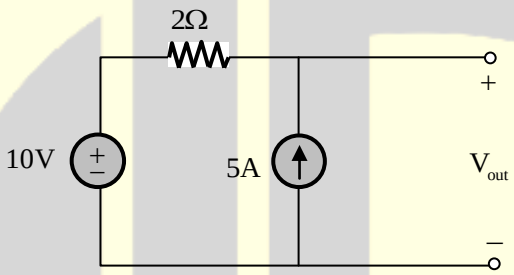

The voltage (V_{out}) across the current source, in volts, is

(A) 0 (B) 5 (C) 10 (D) 20

Answer: (D)

24. The graph associated with an electrical network has 7 branches and 5 nodes. The number of independent KCL equations and the number of independents KVL equations, respectively, are

(A) 2 and 5 (B) 5 and 2 (C) 3 and 4 (D) 4 and 3

Answer: (D)

25. The electrodes, whose cross-sectional view is shown in the figure below, are at the same potential, the maximum electric field will be at the point

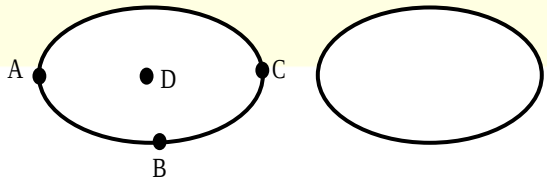

(A) A (B) B (C) C (D) D

Answer: (A)

Q. No. 26 – 55 Carry Two Mark Each

26. The Boolean expression

$\overline{\left(a+\overline{b}+c+\overline{d}\right)+\left(b+\overline{c}\right)}$ simplifies to

(A) 1 (B) $\overline{a.b}$ (C) a.b (D) 0

Answer: (B)

27. For the circuit shown below, taking the opamp is ideal, the output voltage V_{out} in terms of the input voltages V_1, V_2 and V_3 is

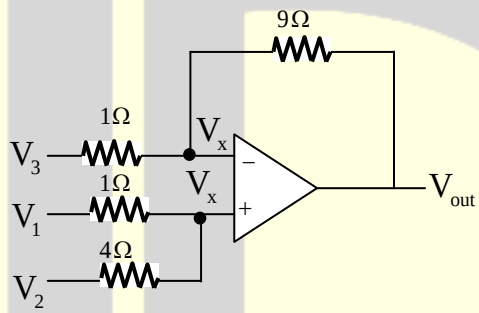

(A) $1.8V_1+7.2V_2-V_3$ (B) $2V_1+8V_2-9V_3$

(C) $7.2V_1+1.8V_2-V_3$ (D) $8V_1+2V_2-9V_3$

Answer: (D)

28. Let $x_1(t)\leftrightarrow X_1(\omega)$ and $x_2(t)\leftrightarrow X_2(\omega)$ be two signals whose Fourier Transforms are as shown in the figure below. In the figure h(t) = $e^{-2|t|}$ denotes the impulse response.

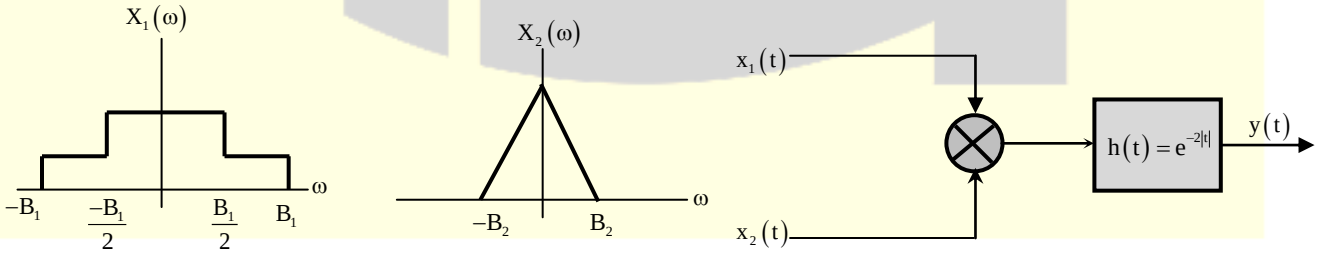

For the system shown above, the minimum sampling rate required to sample y(t), so that y(t) can be uniquely reconstructed from its samples, is

(A) $2B_1$ (B) $2(B_1+B_2)$ (C) $4(B_1+B_2)$ (D) ∞

Answer: (B)

29. The value of the integral $2\int_{-\infty}^{\infty}\left(\frac{\sin 2\pi t}{\pi t}\right)dt$ is equal to

(A) 0 (B) 0.5 (C) 1 (D) 2

Answer: (D)

---

30. Let y(x) be the solution of the differential equation $\frac{d^2y}{dx^2}-4\frac{dy}{dx}+4y=0$ with initial conditions $y(0)=0$ and $\left.\frac{dy}{dx}\right|_{x=0}=1$. Then the value of y (1) is _____.

Answer: (7.398)

---

31. The line integral of the vector field F = $5xz\hat{i}+\left(3x^2+2y\right)\hat{j}+x^2z\hat{k}$ along a path from (0,0,0) to (1,1,1) parameterized by $\left(t,t^2,t\right)$ is _____.

Answer: (4.4167)

---

32. Let P = $\begin{bmatrix}3 & 1\\ 1 & 3\end{bmatrix}$. Consider the set S of all vector $\begin{pmatrix}x\\ y\end{pmatrix}$ such than $a^2+b^2=1$ where $\begin{pmatrix}a\\ b\end{pmatrix}=p\begin{pmatrix}x\\ y\end{pmatrix}$. Then S is

(A) A circle of radius $\sqrt{10}$

(B) a circle of radius = $\frac{1}{\sqrt{10}}$

(C) an ellipse with major axis along $\begin{pmatrix}1\\ 1\end{pmatrix}$

(D) an ellipse with minor axis along $\begin{pmatrix}1\\ 1\end{pmatrix}$

Answer: (D)

---

33. Let the probability density function of random variable, X, be given as:

$$f_x(x) = \frac{3}{2} e^{-3x} u(x) + ae^{4x} u(-x)$$

where u(x) is the unit step function. Then the value of 'a' and Prob $\{X \le 0\}$, respectively, are

(A) $2, \frac{1}{2}$ (B) $4, \frac{1}{2}$ (C) $2, \frac{1}{4}$ (D) $4, \frac{1}{4}$

Answer: (A)

34. The driving point input impedance seen from the source V_S of the circuit shown above, in Ω, is _____.

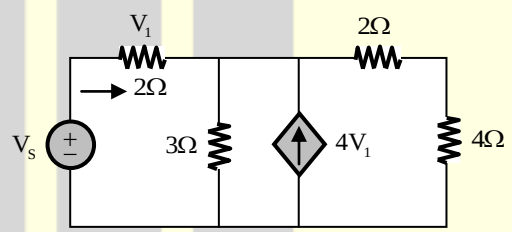

Answer: (20)

35. The z-parameters of the two-port network shown in the figure are $z_{11} = 40\Omega$, $z_{12} = 60\Omega$, $z_{21} = 80\Omega$ and $z_{22} = 100\Omega$.

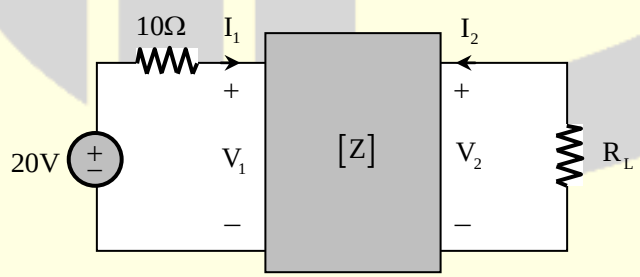

The average power delivered to $R_L = 20\Omega$, in watts, is _____.

Answer: (35.5)

36. In the balanced 3-phase, 50Hz, circuit shown below, the value of inductance (L) is 10 mH.

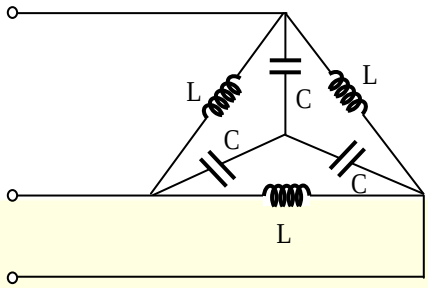

The value of the capacitance (C) for which all the line currents are zero, in millifarads, is _____.

Answer: (3.04)

37. In the circuit shown below, the initial capacitor voltage is 4V. Switch S_1 is closed at t = 0.

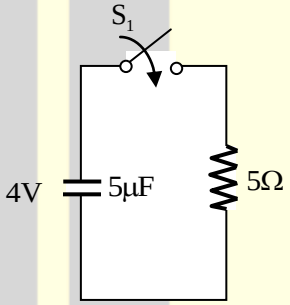

The charge $(\text{in } \mu C)$ lost by the capacitor from $t = 25\mu s$ to $t = 100\,\mu s$ is _____.

Answer: (6.9)

38. The single line diagram of a balanced power system is shown in the figure. The voltage magnitude at the generator internal bus is constant and 1.0 p.u.

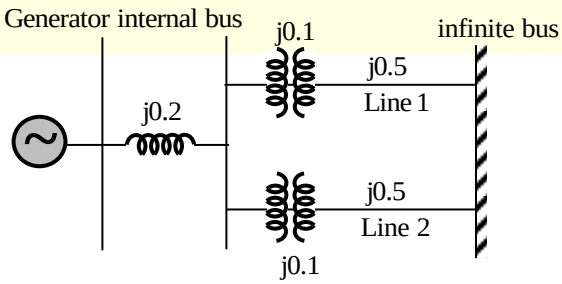

The p.u. reactances of different components in the system are also shown in the figure. The infinite bus voltage magnitude is 1.0p.u.

A three phase fault occurs at the middle of line 2. The ratio of the maximum real power that can be transferred during the pre-fault condition to the maximum real power that can be transferred under the faulted condition is _____.

Answer: (2.286)

39. The open loop transfer function of a unity feedback control system is given by

$$G(s) = \frac{k(s+1)}{s(1+Ts)(1+2s)},\ k > 0,\ T > 0.$$

The closed loop system will be stable if

(A) $0 < T < \frac{4(k+1)}{k-1}$

(B) $0 < k < \frac{4(T+2)}{T-2}$

(C) $0 < k < \frac{T+2}{T-1}$

(D) $0 < T < \frac{8(k+1)}{k-1}$

Answer: (C)

40. At no load condition a 3-phase, 50Hz, lossless power transmission line has sending –end and receiving-end voltage of 400 kV and 420kV respectively. Assuming the velocity of traveling wave to be the velocity of light, the length of the line, in km, is _____.

Answer: (294.59)

41. The power consumption of industry is 500kVA, at 0.8 p.f. lagging. A synchronous motor is added to raise the power factor of the industry to unity. If the power intake of the motor is 100kW. The p.f. of the motor is _____.

Answer: (0.3162)

42. The flux linkage (λ) and current (i) relation for an electromagnetic system is $\lambda = \left(\sqrt{i}\right)/g$. When i = 2A and g $(\text{air} - \text{gap length}) = 10\text{cm}$, the magnitude of mechanical force on the moving part, in N, is _____.

Answer: (282.84)

43. The starting line current of a 415V, 3-phase, delta connected induction motor is 120A, when the rated voltage is applied to its stator winding. The starting line current at a reduced voltage of 110V, in ampere is _____.

Answer: (31.8)

44. A single-phase, 2kVA, 100/200V transformer is reconnected as an auto-transformer such that its kVA rating is maximum. The new rating in kVA, is _____.

Answer: (6)

45. A full-bridge converter supplying in RLE load is shown in figure. The firing angle of the bridge converter is 120°. The supply voltage is

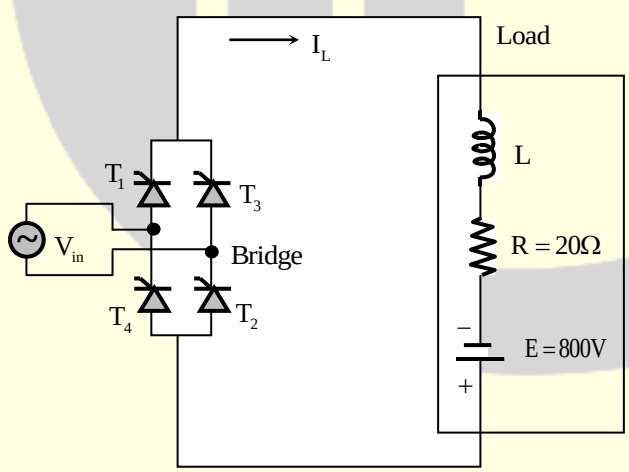

$V_m(t) = 200\pi\sin(100\pi t)\text{V},\ R = 20\Omega,\ E = 800\text{V}.$

The inductor L is large enough to make the output current I_L a smooth dc current. Switches are lossless. The real power fed back to the source in kW is _____.

Answer: (6)

46. A three - phase Voltage Source Inverter (VSI) as shown in the figure is feeding a delta connected resistive load of $30\Omega/\text{phase}$.

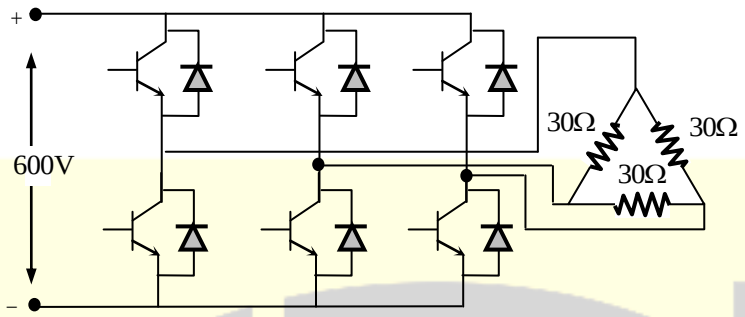

If it is fed from a 600V battery, with 180° conduction of solid-state devices, the power consumed by the load, in kW, is _____.

Answer: (24)

---

47. A DC-DC boost converter, as shown in the figure below, is used to boost 360V to 400V, at a power of 4kW. All devices are ideal.

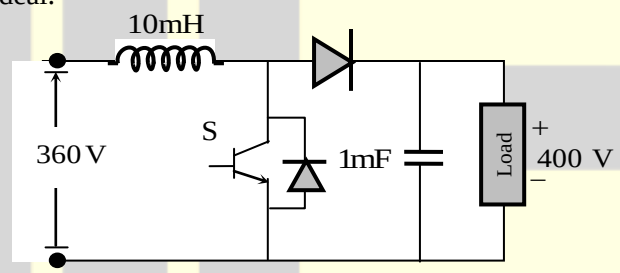

Considering continuous inductor current, the rms current in the solid state switch (S), in ampere, is _____.

Answer: (3.51)

---

48. A single-phase bi-directional voltage source converter (VSC) is shown in the figure below.

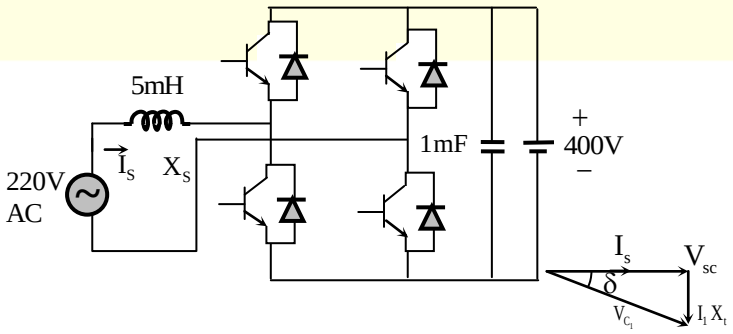

All devices are ideal. It is used to charge a battery at 400V with power of 5kW from a source sinusoidal AC mains at unity p.f. If its ac side interfacing inductor is 5mH and the switches are operated at 20kHz, then the phase shift (δ) between AC mains voltage (V_S) and fundamental AC rms VSC voltage (V_{C1}), in degree, is_____.

Answer: (9.2)

49. Consider a linear time invariant system $\dot{x} = Ax$, with initial condition x(0) at t = 0. Suppose α and β are eigenvectors of (2×2) matrix A corresponding to distinct eigen values λ_1 and λ_2 respectively. Then the response $x(t)$ of the system due to initial condition x (0) = α is

(A) $e^{\lambda_1 t}\alpha$ (B) $e^{\lambda_1 t}\beta$ (C) $e^{\lambda_2 t}\alpha$ (D) $e^{\lambda_2 t}\alpha + e^{\lambda_2 t}\beta$

Answer: (A)

50. A second-order real system has the following properties:

(a) the damping ratio $\zeta = 0.5$ and undamped natural frequency $\omega_n = 10$ rad/s,

(b) the steady state value of the output, to a unit step input, is 1.02.

The transfer function of the system is

(A) $\dfrac{1.02}{s^2+5s+100}$ (B) $\dfrac{102}{s^2+10s+100}$

(C) $\dfrac{100}{s^2+10s+100}$ (D) $\dfrac{102}{s^2+5s+100}$

Answer: (B)

51. Three single-phase transformers are connected to form a delta-star three-phase transformer of 110kV/11kV. The transformer supplies at 11kV a load of 8MW at 0.8 p.f. lagging to a nearby plant. Neglect the transformer losses. The ratio of phase current in delta side to star side is

(A) $1:10\sqrt{3}$ (B) $10\sqrt{3}:1$ (C) $1:10$ (D) $\sqrt{3}:10$

Answer: (C)

52. The gain at the breakaway point of the root locus of a unity feedback system with open loop transfer function $G(s)=\frac{ks}{(s-1)(s-4)}$ is

(A) 1 (B) 2 (C) 5 (D) 9

Answer: (A)

53. Two identical unloaded generators are connected in parallel as shown in the figure.

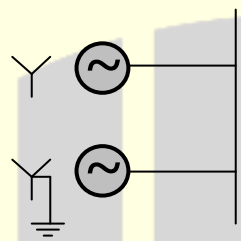

Both the generators are having positive, negative and zero sequence impedance of j0.4 p.u, j 0.3 p.u and j0.15 p.u., respectively. If the pre-fault voltage is 1 p.u., for a line-to-ground (L-G) fault at the terminals of the generators, the fault current, in p.u., is _____.

Answer: (6)

54. An energy meter, having meter constant of 1200 revolutions kWh, makes 20 revolutions in 30 seconds for a constant load. The load, in kW is _____.

Answer: (2)

55. A rotating conductor of 1m length is placed in a radially outward (about the z-axis) magnetic flux density (B) of 1 Tesla as shown in figure below. Conductor is parallel to and at 1m distance from the z-axis.

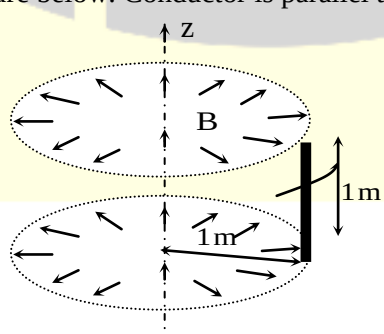

The speed of the conductor in r.p,m. required to induce a voltage of 1V across it, should be _____.

Answer: (9.55)