ELECTRONICS AND TELECOMMUNICATIONS ENGINEERING

PAPER-I

Time Allowed: **Three Hours** Maximum Marks: **300**

Question Paper Specific Instructions

Please reach each of the following instruction carefully before attempting questions:

*There are **EIGHT** questions divided in **TWO** sections.*

*Candidate has to attempt **FIVE** questions in all*

*Questions **No.1** and **5** are **compulsory** and out of the remaining, any **THREE** are to be attempted choosing at least **ONE** question from each section.*

The number of marks carried by a question/part is indicated against it.

Wherever any assumptions are made for answering a question, they must be clearly indicated.

Diagrams/figures, wherever required, shall be drawn in the space provided for answering the question itself.

Unless otherwise mentioned, symbols and rotations carry their usual standard meanings.

Attempts of questions shall be counted in sequential order. Unless struck off, attempt of a question shall be counted even if attempted partly.

Any page of portion of the page left blank in the Question-cum-Answer Booklet must be clearly struck off.

*Answers must be written in **ENGLISH** only.*

Values of constants which may be required:

Electron charge	$= -1.6 \times 10^{-19}$ Coulomb
Free space permeability	$= 4\pi \times 10^{-7}$ Henry/m
Free space permittivity	$= \left(\frac{1}{36\pi}\right) \times 10^{-9}$ Farad/m
Velocity of light in free space	$= 3 \times 10^{8}$ m/sec
Boltzmann constant	$= 1.38 \times 10^{-23}$ J/K
Planck's constant	$= 6.626 \times 10^{-34}$ J-s

SECTION-A

1. **(a)** **(i)** Calculate the temperature at which silicon (Si) semiconductor tends to behave like a metal.

(ii) Prove that reverse saturation current approximately doubles for every 10°C rise in temperature in a semiconductor diode.

[12 Marks]

(b) **(i)** Prove that when two resistors are connected in parallel, the equivalent resistance of the combination is always smaller than that of smaller resistor.

(ii) A conductor has resistance 5.4Ω at 20°C and 7Ω at 100°C. Determine the resistance of the conductor at 0°C.

[12 Marks]

(c) What is the temperature defect in a crystal? How does it affect the properties of a metal.?

[12 Marks]

(d) **(i)** Enumerate the different performance indices based on which an engineer selects an instrument.

[5 Marks]

(ii) What is the SI system of units? Mention some (at least four) well-defined units maintained by the International System of Units.

[7 Marks]

(e) In the circuit shown in the figure below. I = 1 mA is a DC current and $v_{in}(t)$ is a sinusoidal voltage with small amplitude.

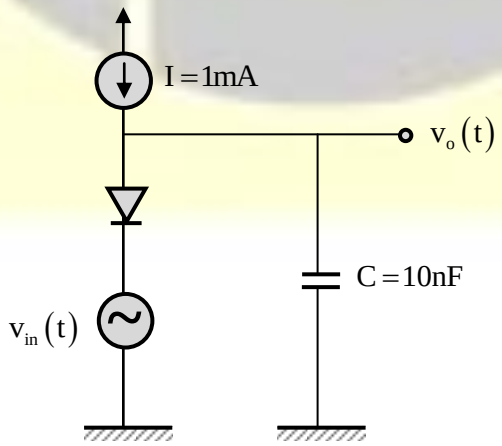

Representing the diode by its small signal resistance r_d, which is a function of I, sketch the circuit for determining $v_o(t)$ and thus out cutoff frequency f_H. (Assume $V_T = 25mV$ at room temperature).

[12 Marks]

2. **(a)** **(i)** Find the equilibrium hole concentration p_o at 300 K of Si sample doped with phosphorous impurity if Fermi level energy (E_F) of doped Si is 0.407 eV more than intrinsic level energy (E_i). Given $n_i = 1.5 \times 10^{10}$ atoms/cm^3 and kT = 0.0259 eV.

[10 Marks]

(ii) A filter capacitor C is used to smooth out the pulses from the full-wave rectifier as shown in the figure below:

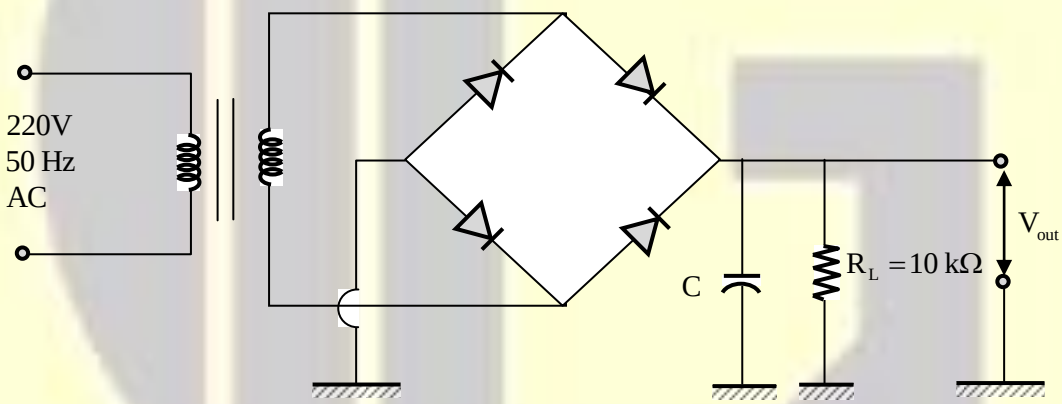

Find the value of C so that the steady current supply to load R_L can be maintained.

[10 Marks]

(b) **(i)** What is the principle of nanomagnetism? Based on the specific properties of nanomagnetism, write its application in engineering field.

(ii) Classify insulating materials according to their temperature stability limit and given few examples of each grade.

[20 Marks]

(c) **(i)** What are the signal conditioning requirements for measurements with strain gauge? How can you compensate errors due to temperature in strain gauge measurement?

(ii) A piezoelectric transducer is subjected to a force of 6N. The dimension of the transducer is given as 6mm × 1.3mm. The charge sensitivity and the dielectric constant of the transducer area given as 160 pC/N and $1250\times10^{-11}\ \text{F/m}$ respectively. Calculate the voltage generated and the deflection caused to the surface. The Young's modulus of elasticity of the material is given as $12\times10^{6}\ \text{N/m}^2$.

[10 Marks]

---

3. **(a)** **(i)** Calculate the range of base resistance (R_B) so that transient T_1 never operate in saturation region:

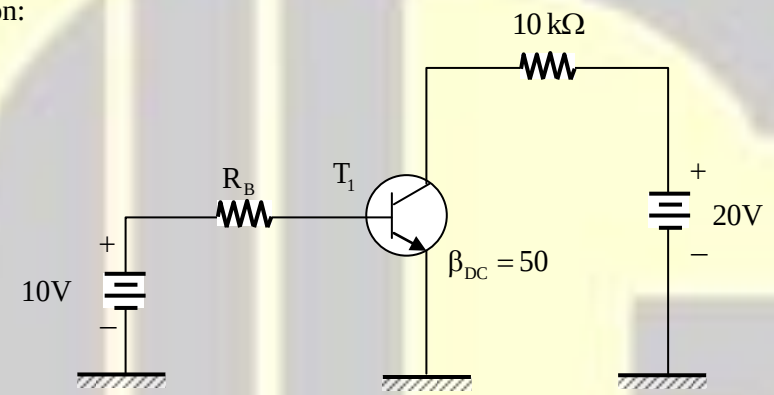

(ii) An amplifier has a bandwidth of 500 kHz and voltage gain of 100. What should be the amount of negative feedback if the amplifier bandwidth is extended to 5 MHz? What will be the new gain after negative feedback is introduced?

[20 Marks]

(b) **(i)** What are HTSC? Write the important applications of superconducting materials and HTSC.

(ii) "A ceramist can be alter the properties of ceramic." Justify the statement.

[20 Marks]

(c) **(i)** Explain, with necessary diagram, how you can detect the proximity of an object.

(ii) The spring constant and seismic mass of an accelerometer are 3300 N/m and 5×10^{-2} kg respectively. The maximum displacement is $\pm0.25\text{m}$ (before the mass hits the stops). Calculate (1) the maximum measurable acceleration in g and (2) the natural frequency.

[20 Marks]

4. **(a)** **(i)** Consider a differential amplifier as shown in the figure

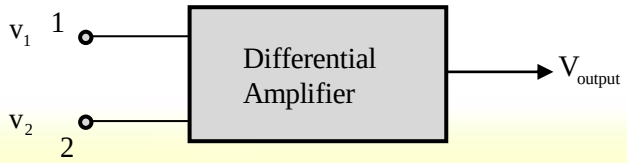

Where the first set of signals is $v_1 = 50\mu V, v_2 = -50\mu V$ and the second set of signals is $v_1 = 1050\mu V, v_2 = 950\mu V$. If the common-mode rejection ratio is 100, calculate the percentage difference in output voltage obtained for the two sets of input signals.

[10 Marks]

(ii) **1.** Repeat part (a)(i), if the common-mode rejection ratio is 1.0^5.

2. Draw the conclusion by comparison party (a) (i) and part (a)(ii)(1).

(iii) Explain photovoltaic potential in short

[10 Marks]

(b) **(i)** What is the polarization mechanism in dielectric material? Explain active and passive dielectrics with suitable example.

(ii) Explain cermets. How are they different from fibre reinforced composites?

Write four applications of each.

[20 Marks]

(c) **(i)** What are the elements of a generalized data acquisition system? Draw a multi-channel data acquisition system using single A/D converter and briefly explain its working.

(ii) Explain, with a diagram, the operation of a force balance current telemetering system.

[20 Marks]

SECTION-B

5. **(a)** **(i)** Find the value of resistance R in the figure below if the voltmeter reads 12V and ammeter reads 0.100A

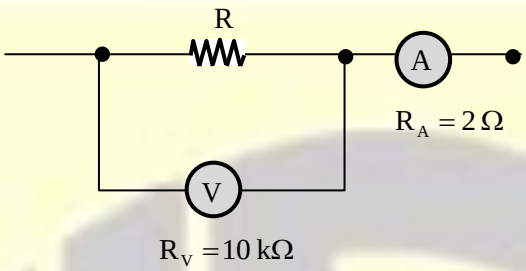

(ii) Repeat part (a) (i) for the circuit arrangement given in the figure below:

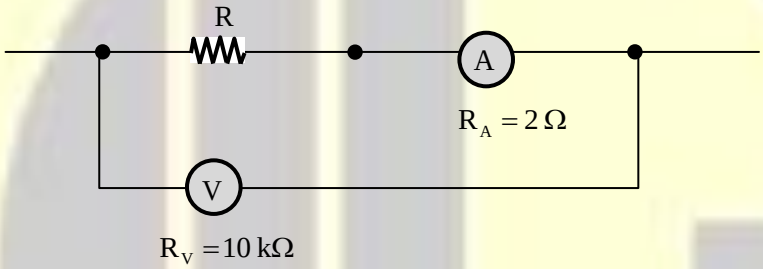

[12 Marks]

(b) Copper has an atomic radius of 0.1278 nm. Calculate the atomic density (number of atoms per unit) in (1 0 0) plane of copper (FCC).

[12 Marks]

(c) How can you convert a galvanometer into an ammeter and a voltmeter? A PMMC galvanometer of 6Ω resistance reads up to 60 mA. Determine the value of the resistance (i) when connected in parallel to enable the instrument to read up to 1.20A and (ii) when connected in series enable it to read 12V.

[12 Marks]

(d) In the circuit given below, $v_c(0^-) = v_o$, while the inductor is not charged. The switch that is initially open is closed at t = 0. Also L = C in terms of numerical value. Find R (positive value) so that the circuit is critically damped:

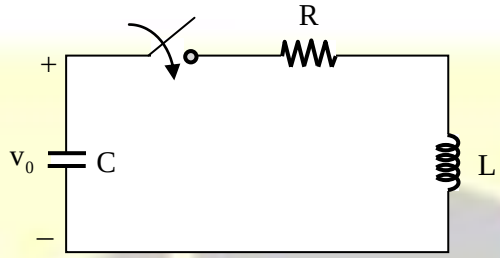

[12 Marks]

(e) In the feedback circuit shown in the figure below, h_{fe} is very large. Identity the type of feedback, and (i) find the feedback factor β and overall transresistance with feedback and (ii) overall voltage gain, $A_{vs} = \frac{v_o}{v_s}$:

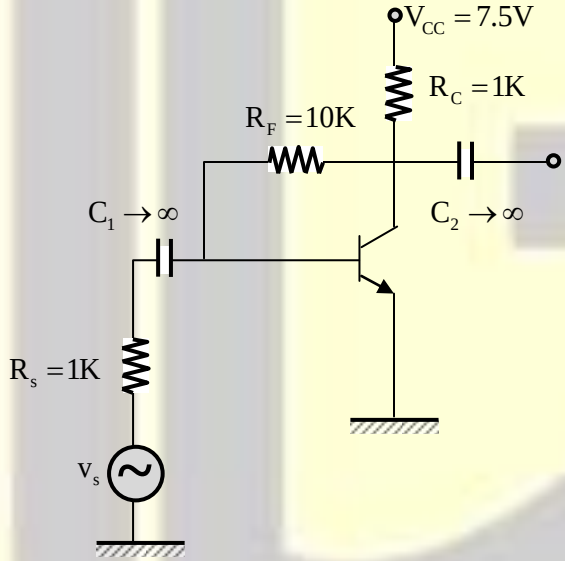

[12 Marks]

6. **(a)** **(i)** A voltage source delivers 4A when the load connected is 5Ω and 2A when the load is 20Ω. What is the maximum power it can deliver? Also calculate power transfer efficiency with $R_L = 5\Omega$ and power transfer efficiency when it delivers 50W.

(ii) Find the Thevenin equivalent of the circuit at a-b:

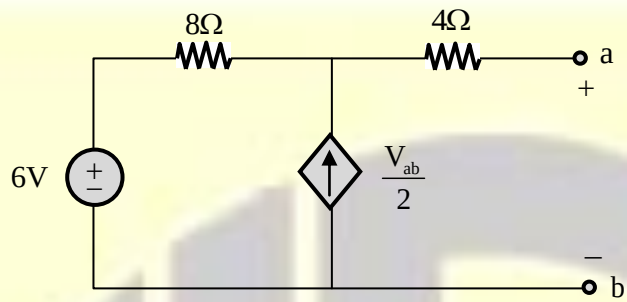

[20 Marks]

(b) **(i)** For the circuit shown in the figure below, it is known that the across the capacitor is $v_C(t) = 20\sin\left(2t + \frac{\pi}{6}\right)$V for $t \geq 0$. Compute and plot the instantaneous power absorbed by the capacitor and energy stored by the capacitor over [0, t]:

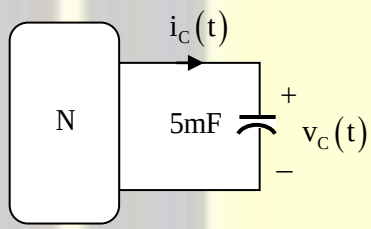

(ii) The op-amp in the figure assumed to be ideal $R_1 = 20\,k\Omega$, $R_2 = 40\,k\Omega$ and $C = 10\mu F$:

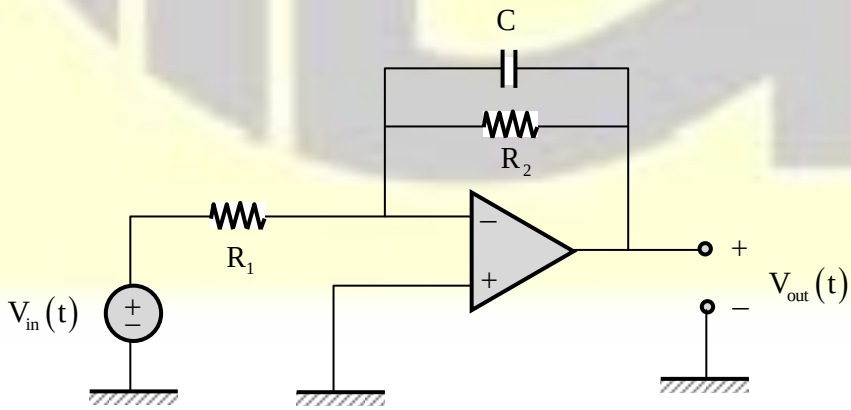

1. Use nodal to construct a first-order differential equation describing the input-output relationship of the voltage
2. Laplace transform your equation of (1) and solve $v_{out}(s)$ in terms of $v_{in}(s)$ and $v_C(0^-)$.
3. If $v_{in}(t) = 2e^{-2t}u(t)V$ and $v_C(0) = 0$, find $v_{out}(t)$

[20 Marks]

(c) A certain person with poor television reception and no access to cable TV intends to use the amplifier in the figure shown below as booster amplifier between his antenna and his television.

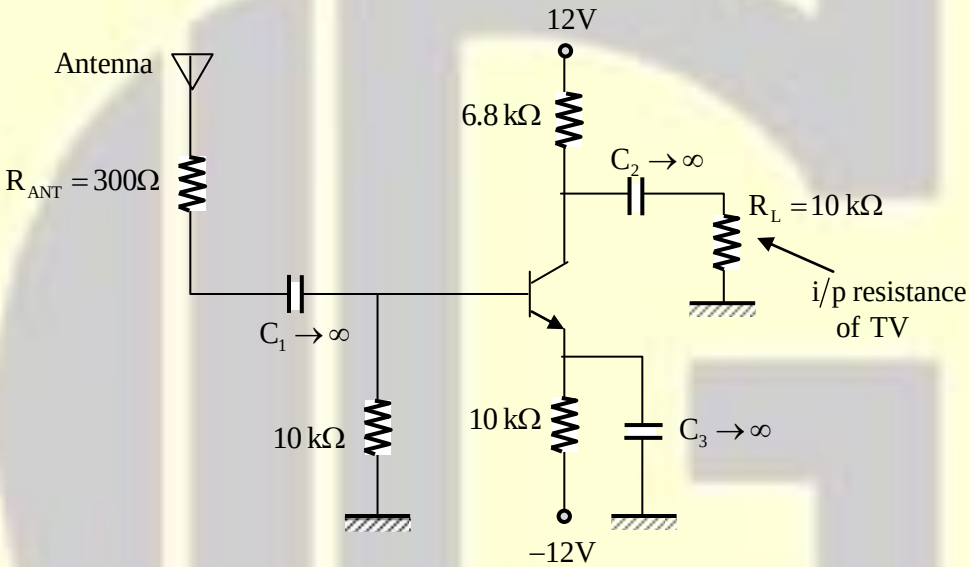

The transistor has high frequency capacitance with $C_{bc} = 4pF, C_{be} = 2pF,\ C_{ce} = 1pF$ and $\beta = 100$. Calculate low-pass dominant pole frequency and determine whether this amplifier adequately. (Assume $V_T = 26\ mV$ at room temperature).

[20 Marks]

7. **(a)** In the circuit shown in the figure below, $|V_1| = 200V$, $V_2 = 200\angle 0°$ V and $|I| = 12A$. The total power absorbed by the circuit is 1.8 kW. Find R_1, X_1 and X_2:

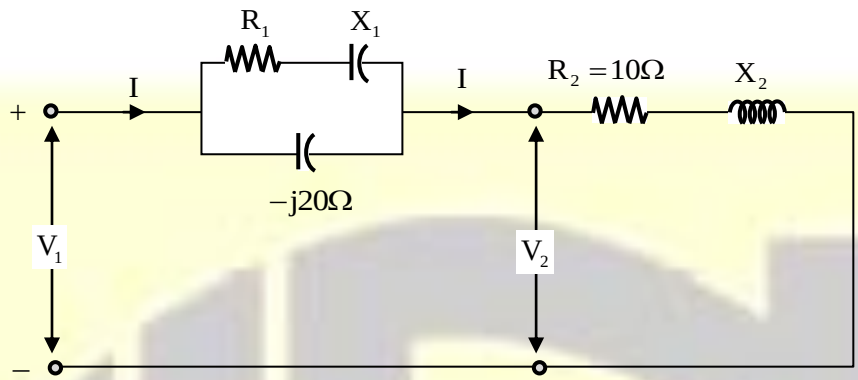

[20 Marks]

(b) **(i)** Determine the voltage across the resistor in the circuit of the figure shown below using phasor concept for $v_1(t) = 20\cos(\omega t + 53.13°)V, v_2(t) = 19.68\sin(\omega t + 152.8°)$ and $v_3(t) = 4.215\cos(\omega t + 71.61°)V$:

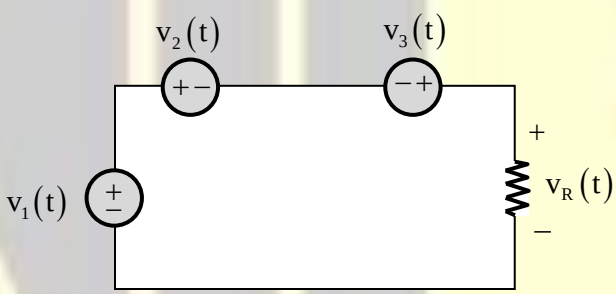

(ii) Find the Laplace transform of the sawtooth sketched the figure below:

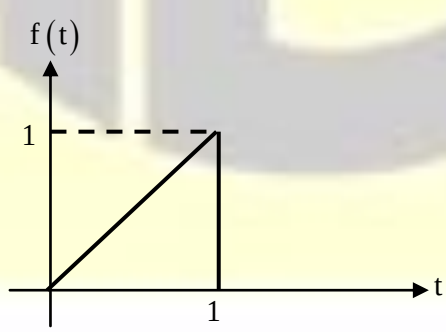

(iii) The figure below shows a simplified model of an audio amplifier containing an ideal transformer. The input voltage is at 2 kHz with a magnitude 1V r.m.s The load is a loudspeaker, represented by 4Ω resistance:

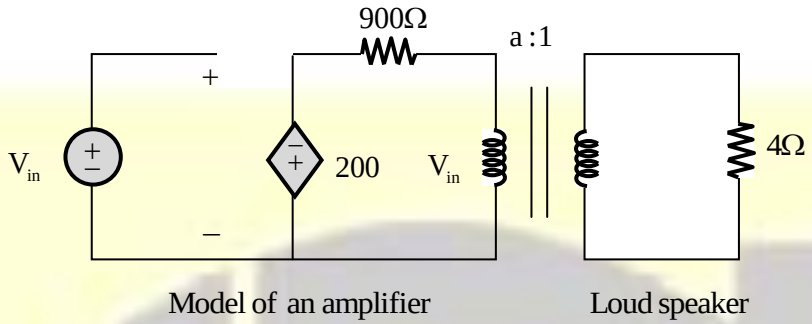

1. Find the average power delivered to the 4Ω load if it is directly connected to the amplifier (i.e., with the transformer removed).
2. With the transformer connected and with turns ratio a = 5, find the average power delivered to the load.

[20 Marks]

(c) **(i)** Implement the logic function shown below with a static CMOS gate:

$$\text{Out} = \overline{AB\bar{C} + ABC + \bar{A}BC}$$

(ii) A certain counting type 12-bit ADC operates with FSR = 0 to 10V and clock frequency $f_{clk} = 1\,\text{MHz}$. Determine the dynamic range of the converter, conversion time, conversion rate and Nyquist frequency of the converter.

[20 Marks]

---

8. **(a)** A shunt generator delivers 50 kW at 250V when running at 400 r.p.m. The armature and field resistance are 0.02Ω and 50Ω respectively. Calculate the speed of the machine when running as a shunt motor and taking 50 kW at 250V. Given, total voltage drop in the brushes is 2V.

[20 Marks]

(b) **(i)** The linear resistive circuit shown in the figure below has four independent sources. Three of them have fixed value, only one, i_{s3} is adjustable:

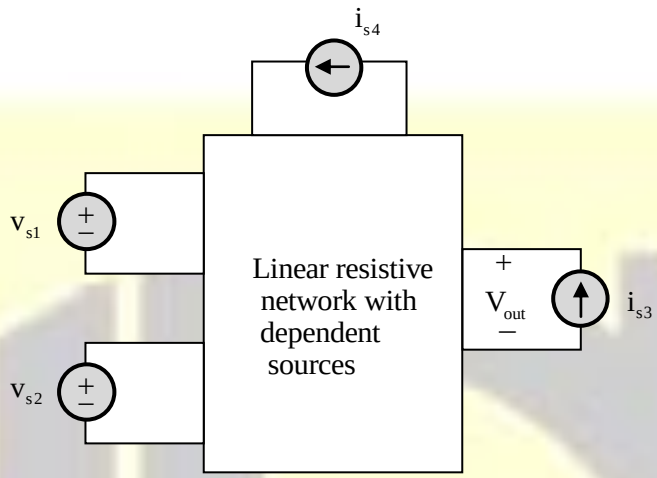

The table shows the four sets of measurements taken in a laboratory:

$i_{s3}(mA)$	$V_{out}(V)$
1	6
2	10
5	?
?	0

Complete the last two rows of the table. For the data in row 3, find the power delivered by the current source i_{s3}.

(ii) Consider the three-source circuit of the figure below:

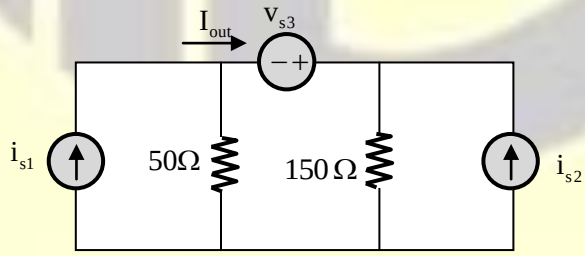

Compute I_{out} using superposition theorem.

[20 Marks]

(c) **(i)** For the circuit shown in the figure below, determine the output voltage if the input $v_{in}(t) = 100\sin(2\pi \times 10^3 t)$ mV. Assume that the op-amp is an ideal op-amp and MOSFET parameters are $\mu_n c_{ox} = 100\ \mu A/V^2$, $V_{tn} = 1V$, $W = 10\ \mu m$ and $L = 2.5\ \mu m$:

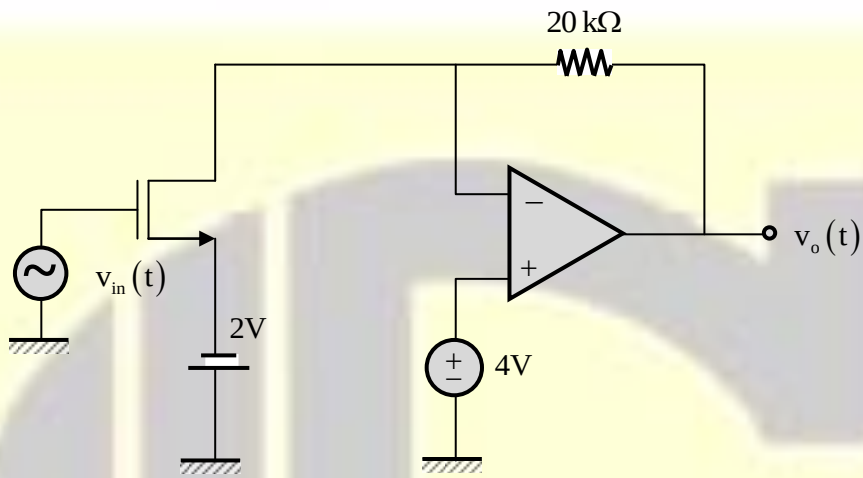

(ii) Draw a block diagram of a 4 2 encoder. Label all inputs and outputs. How is the 4 to 2 encoder different from 4 to 1 multiplexer?

[20 Marks]