GENERAL APTITUDE

1. Consider the following inequalities.

(i) $3p - q < 4$

(ii) $3q - p < 12$

Which one of the following expressions below satisfies the above two inequalities?

(A) $p + q < 8$ (A) $p + q = 8$

(C) $8 \le p + q < 16$ (D) $p + q \ge 16$

2. A game consists of spinning an arrow around a stationary disk as shown below.

When the arrow comes to rest, there are eight equally likely outcomes. It could come to rest in any one of the sectors numbered 1, 2, 3, 4, 5, 6, 7 or 8 as shown. Two such disks are used in a game where their arrows are independently spun. What is the probability that the sum of the numbers on the resulting sectors upon spinning the two disks is equal to 8 after the arrows come to rest?

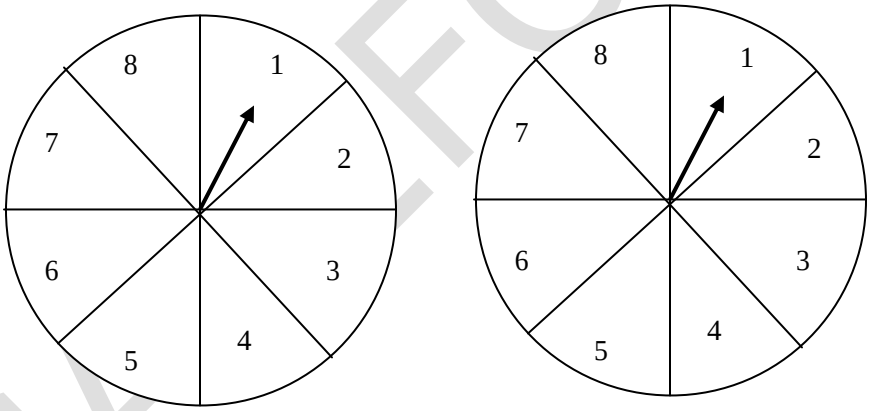

(A) $\frac{1}{16}$ (A) $\frac{5}{64}$ (C) $\frac{3}{32}$ (D) $\frac{7}{64}$

3. Inhaling the smoke from a burning _____ could _____ you quickly.

(A) tire / tier (A) tire / tyre (C) tyre / tire (D) tyre / tier

© All rights reserved by Thinkcell Learning Solutions Pvt. Ltd. No part of this booklet may be reproduced or utilized in any form without the written permission

4. Rice, a versatile and inexpensive source of carbohydrate, is a critical component of diet worldwide. Climate change, causing extreme weather, poses a threat to sustained availability of rice. Scientists are working on developing Green Super Rice (GSR), which is resilient under extreme weather conditions yet gives higher yields sustainably.

Which one of the following is the CORRECT logical inference based on the information given in the above passage?

(A) GSR is an alternative to regular rice, but it grows only in an extreme weather

(A) GSR may be used in future in response to adverse effects of climate change

(C) GSR grows in an extreme weather, but the quantity of produce is lesser than regular rice

(D) Regular rice will continue to provide good yields even in extreme weather

5. Six persons P, Q, R, S, T and U are sitting around a circular table facing the center not necessarily in the same order. Consider the following statements:

- P sits next to S and T.
- Q sits diametrically opposite to P.
- The shortest distance between S and R is equal to the shortest distance between T and U.

Based on the above statements, Q is a neighbor of

(A) U and S (A) R and T (C) R and U (D) P and S

6. A building has several rooms and doors as shown in the top view of the building given below. The doors are closed initially.

What is the minimum number of doors that need to be opened in order to go from the point P to the point Q?

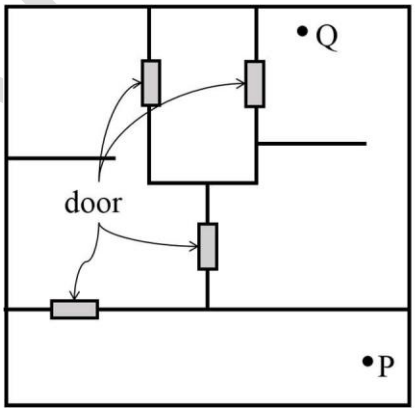

(A) 4 (A) 3 (C) 2 (D) 1

© All rights reserved by Thinkcell Learning Solutions Pvt. Ltd. No part of this booklet may be reproduced or utilized in any form without the written permission

7. A sphere of radius r cm is packed in a box of cubical shape.

What should be the minimum volume (in cm^3) of the box that can enclose the sphere?

(A) $\frac{r^3}{8}$ (A) r^3 (C) $2r^3$ (D) $8r^3$

8. Which one of the following sets of pieces can be assembled to form a square with a single round hole near the center? Pieces cannot overlap.

(A)

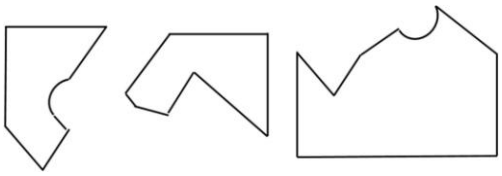

(A)

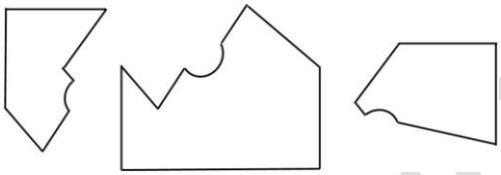

(C)

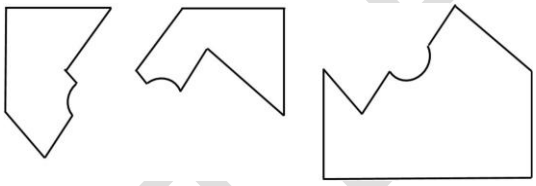

(D)

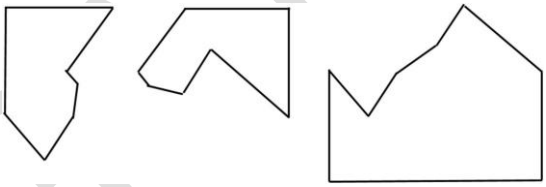

© All rights reserved by Thinkcell Learning Solutions Pvt. Ltd. No part of this booklet may be reproduced or utilized in any form without the written permission

9. Given below are three statements and four conclusions drawn based on the statements.

Statement 1: Some engineers are writers.

Statement 2: No writer is an actor.

Statement 3: All actors are engineers.

Conclusion I: Some writers are engineers.

Conclusion II: All engineers are actors.

Conclusion III: No actor is a writer.

Conclusion IV: Some actors are writers.

Which one of the following options can be logically inferred?

(A) Only conclusion I is correct

(A) Only conclusion II and conclusion III are correct

(C) Only conclusion I and conclusion III are correct

(D) Either conclusion III or conclusion IV is correct

10. Pipes P and Q can fill a storage tank in full with water in 10 and 6 minutes, respectively. Pipe R draws the water out from the storage tank at a rate of 34 litres per minute. P, Q and R operate at a constant rate. If it takes one hour to completely empty a full storage tank with all the pipes operating simultaneously, what is the capacity of the storage tank (in litres)?

(A) 26.8 (A) 60.0 (C) 120.0 (D) 127.5

GATEFORUM

© All rights reserved by Thinkcell Learning Solutions Pvt. Ltd. No part of this booklet may be reproduced or utilized in any form without the written permission

CHEMICAL ENGINEERING

1. An elementary irreversible liquid-phase reaction, $2P \xrightarrow{k} Q$, where the rate constant k=2L mol^{-1} min^{-1}, takes place in an isothermal non-ideal reactor. The E-curve in a tracer experiment is shown in the figure. Pure P (2 mol L^{-1}) is fed to the reactor. Using the segregated model. The percentage conversion of P at the exit of the reactor is _____% (rounded off to the nearest integer).

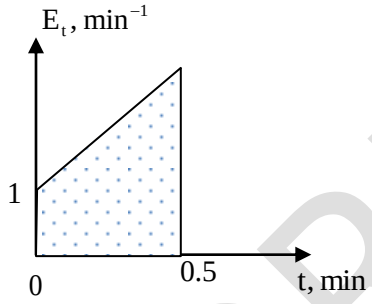

Key: (50)

Sol: $\bar{X}_A = \int_0^\infty (X_A)_b E(t)dt$

$\bar{X}_A = \int_0^{0.5} \underbrace{(X_A)_b}_{f(t)} E(t)dt$

$$\boxed{X_A = \frac{ktC_{Ao}}{1+ktC_{Ao}} = \frac{4t}{1+4t}} \quad \left[\because k = 2\ L/mol/min,\ C_{Ao} = 2\ mol/L\right]$$

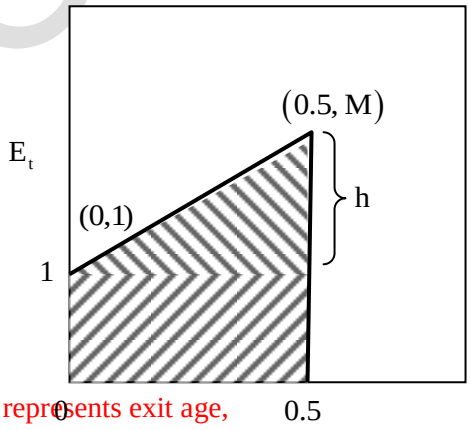

From the diagram, it is clear that area under the curve represents exit age,

Also, $\boxed{\int_0^\infty E(t)dt = 1}$

Area under curve = Area of rectangle + Area of triangle

$= \frac{1}{2}\times 1 + \frac{1}{2}\times 0.5 \times (h)$

So, $\frac{1}{2} + \frac{1}{4}h = 1$

$\Rightarrow h = 2$

© All rights reserved by Thinkcell Learning Solutions Pvt. Ltd. No part of this booklet may be reproduced or utilized in any form without the written permission

Hence, H = 1 + h = 3

So, exit age equation can be formed from (0, 1) and (0.5, 3)

$y - y_1 = m(x - x_1)$ $[\because$ St.luice equation$]$

$$E(t) - 1 = \frac{2}{0.5}(t - 0)$$

$$\boxed{E(t) = 4t + 1}$$

$$\therefore \quad \bar{X}_A = \int_0^{0.5} \frac{4t}{1+4t} \times (4t+1)dt = \int_0^{0.5} 4t\, dt = 0.5$$

Answer 50%.

2. The area of a circular field is $25m^2$. The radius, r, is to be determined using the Newton-Raphson iterative method. For an initial guess of r =2.500 m, the revised estimate of r after one iteration is _____ m (rounded off to three decimal places).

Key: **(2.842)**

Sol: Given, area of circular field $= 25\ m^2$

$\Rightarrow \pi r^2 = 25$, where r is the radius

Let $f(r) = \pi r^2 - 25$ and initial guess, $r_o = 2.5$

$f'(r) = 2\pi r \Rightarrow f(r_o) = \pi(2.5)^2 - 25 = -5.365$

and $f'(r_o) = 2\pi \times 2.5 = 15.708$

$\therefore$ By Newton – Raphson method,

$$r_1 = r_0 - \frac{f(r_0)}{f'(r_0)} = 2.5 - \frac{(-5.365)}{15.708} \approx 2.842$$

3. Consider steady-state diffusion in a binary A-B liquid at constant temperature and pressure. The mole-fraction of A at two different locations is 0.8 and 0.1. Let N_{A1} be the diffusive flux of A calculated assuming B to be non-diffusing, and N_{A2} be the diffusive flux of A calculated assuming equimolar counter-diffusion. The quantity $\frac{(N_{A1} - N_{A2})}{N_{A1}} \times 100$ is _____ (rounded off to one decimal place).

Key: **(53.3 to 53.5)**

© All rights reserved by Thinkcell Learning Solutions Pvt. Ltd. No part of this booklet may be reproduced or utilized in any form without the written permission

Sol: For diffusion of A through non-diffusing B,

$$N_{A_1} = \frac{D_{AB}.P_T}{RT_2}\ell n\frac{1-x_{A_2}}{1-x_{A_1}}$$

For equimolar counter diffusion

$$N_{A_2} = \frac{D_{AB}P_T}{RT_2}\left(x_{A_1}-x_{A_2}\right)$$

$$\frac{N_{A_1}-N_{A_2}}{N_{A_1}} = \frac{\ell n\left(\frac{1-x_{A_2}}{1-x_{A_1}}\right)-\left(x_{A_1}-x_{A_2}\right)}{\ell n\left(\frac{1-x_{A_2}}{1-x_{A_1}}\right)} = \frac{\ell n\left(\frac{1-0.1}{1-0.8}\right)-(0.8-0.1)}{\ell n\left(\frac{1-0.1}{1-0.8}\right)}$$

$$= \frac{1.504-0.7}{1.504} = 0.5385$$

$$\frac{N_{A_1}-N_{A_2}}{N_{A_1}}\times 100 = 53.35$$

Answer : 53.3 to 53.5

4. The value of $(1+i)^{12}$, where $i=\sqrt{-1}$ is

(A) -64i (A) 64i (C) 64 (D) -64

Key: **(D)**

Sol: $(1+i)^2 = 1^2+2i+i^2 = 1+2i-1 = 2i$

$\therefore (1+i)^4 = (2i)^2 = -4 \quad (\text{since}, i^2=-1)$

$\therefore (1+i)^{12} = \left((1+i)^4\right)^3 = (-4)^3 = -64$, option (D)

5. Consider the process in the figure. The liquid phase elementary reactions

$A+B \rightarrow P \quad -r_{B1} = k_1 x_A x_B$

$P+B \rightarrow S \quad -r_{B2} = k_2 x_P x_B$

$S+A \rightarrow 2P \quad -r_{S3} = k_3 x_S x_A$

occur in the continuous stirred tank reactor (CSTR). where x_i is the mole fraction of the jth component (j = A, B, P, S) in the CSTR. It is given that $k_2 = k_3$. All process feed. process exit and recycle streams are pure. At steady state, the net generation rate of the undesired product. S, in the CSTR is zero.

© All rights reserved by Thinkcell Learning Solutions Pvt. Ltd. No part of this booklet may be reproduced or utilized in any form without the written permission

As q = x_A / x_B, is varied at constant reactor temperature. the reactor volume is adjusted to maintain a constant single-pass conversion of B. For a fixed product rate and 90% conversion of B in the reactor, the value of q that minimizes the sum of the molar flow rates of the A and S recycle streams is (rounded off to one decimal place).

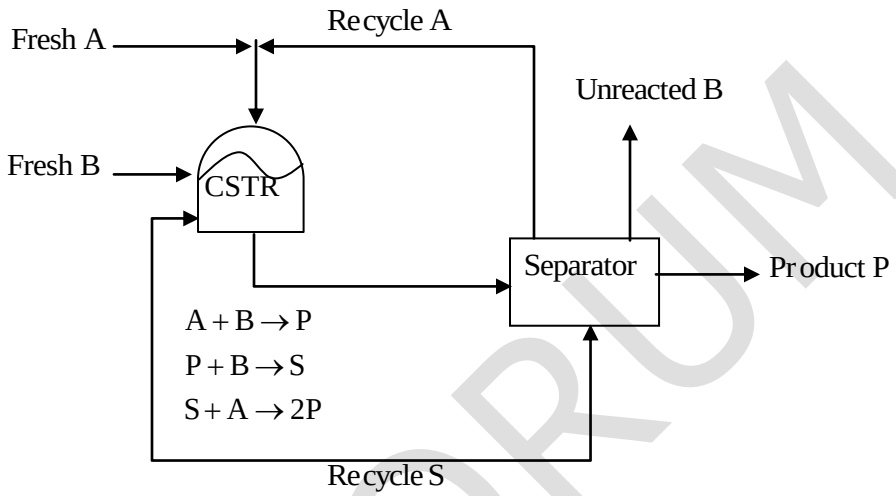

All fresh feeds, process exit streams and recycle streams are pure

6. A compressor with a life of 10 years costs Rs. 10 lakhs. Its yearly operating cost is Rs. 0.5 lakh. If the annual compound interest rate is 8%. The amount needed at present to fund perpetual operation of the compressor is Rs _____ lakhs (rounded to decimal place).

Key: (24.5 to 25)

Sol: Given data,

$V_o = 10$ lakh

$n = 10$ years

Operating cost = 0.5 lakh = 50000 rs

i = 80%

Capitalized cost

$$CC = V_o + \underbrace{\frac{(V_o - V_S)}{(1+i)^n - 1}}_{\text{replacement cost}} + \frac{\text{Operating cost}}{i}$$

$$= 10\times10^5 + \frac{10^6}{(1.08)^{10} - 1} + \frac{50000}{0.08} = 10\times10^5 + 14.878\times10^5 = 24.878\times10^5 \text{ Rs}$$

Answer 24.787 lakh

© All rights reserved by Thinkcell Learning Solutions Pvt. Ltd. No part of this booklet may be reproduced or utilized in any form without the written permission

7. N moles of an ideal gas undergo a two-step process as shown in the figure. Let P, V and T denote the pressure, volume and temperature of the gas, respectively. The gas, initially at state-I (P_1, V_1, T_1). undergoes an isochoric (constant volume) process to reach state-A, and then undergoes an isobaric (constant pressure) expansion to reach state-2 (P_2, V_2, T_2). For an ideal gas, C_p - C_v = NR, where C_p and C_v are the heat capacities at constant pressure and constant volume, respectively, and assumed to be temperature independent. The heat gained by the gas in the two-step process is given by

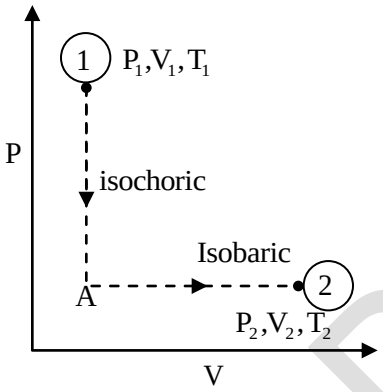

(A) $P_2V_2 - P_1V_1$

(A) $C_p(T_2 - T_1) + C_v(T_2 - T_1)$

(C) $P_2(V_2 - V_1) + C_P(T_2 - T_1)$

(D) $P_2(V_2 - V_1) + C_V(T_2 - V_1)$

Key: (D)

Sol: $\Delta V = \phi_{1-2} + W_{1-2}$

$\Delta V = \phi_{1-2} - \int PdV$

$\phi_{1-2} = \Delta V + \int PdV = C_V(T_2 - T_1) + \text{Area under PV diagram}$

$\phi_{1-2} = P_2(V_2 - V_1) + C_V(T_2 - T_1)$

Answer (D).

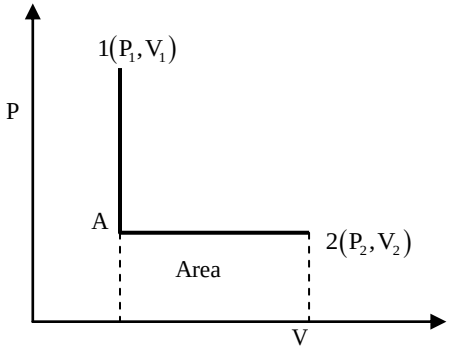

8. A simple distillation column is designed to separate an ideal binary mixture to specified distillate and bottoms purities at a given column pressure. If RR_{min}, is the minimum reflux ratio for this separation, select the statement that is **NOT CORRECT** with regard to the variation in the total annualized cost (TA(C) of the column with reflux ratio (RR).

(A) TAC increases with RR for RR >> RR_{min}.

(A) The sharpest rise in TAC occurs as RR approaches RR_{min}, from above

(C) The sharpest decrease in TAC occurs as RR approaches RR_{min} from above

(D) TAC has a minimum with respect to RR

© All rights reserved by Thinkcell Learning Solutions Pvt. Ltd. No part of this booklet may be reproduced or utilized in any form without the written permission

Key: (B)

Sol: Total annualized cost $= \frac{\text{Capital cost}}{\text{Payback period}} + \text{energy cost}$

So energy cost is dependent on operating reflux ratio

For min reflux ratio, energy cost in minimum

For operating reflux ratio much higher than R_{min}, condenser and reboiler heat duty increase i.e., energy cost increases.

If operating reflux ratio approaches R_{min} from above, the energy cost decreases.

Hence, wrong answer is option B.

9. A perfectly insulated double pipe heat exchanger is operating at steady state. Saturated steam enters the inner pipe at 100°C and leaves as saturated water at 100°C. Cooling water enters the outer pipe at 75°C and exits at 95 °C. The overall heat transfer coefficient is 1 kW m^{-2} K^{-1} and the heat transfer area is 1 m^2. The average specific heat capacity of water at constant pressure is 4.2 kJ $kg^{-1}K^{-1}$. The required cooling water flow rate is kg s^{-1} (rounded off to two decimal places).

Key: (0.147 to 0.149)

Sol:

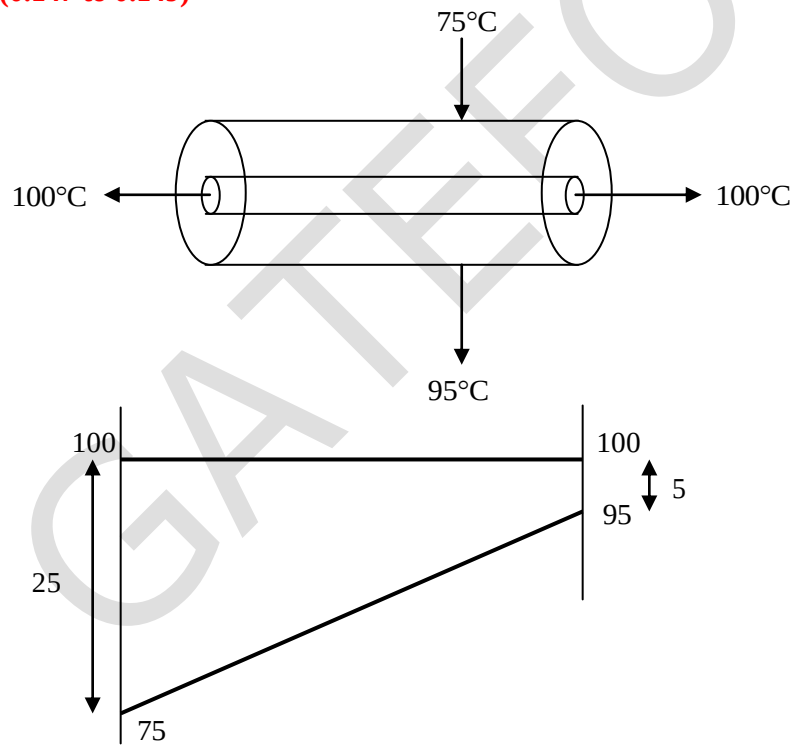

Total heat transfer $= mC_p\Delta = VA\,\Delta T_{lmtd}$

© All rights reserved by Thinkcell Learning Solutions Pvt. Ltd. No part of this booklet may be reproduced or utilized in any form without the written permission

$$\Delta T_{lmtd} = \frac{\Delta T_1 - \Delta T_2}{\ell n\left(\frac{\Delta T_1}{\Delta T_2}\right)} = \frac{25-5}{\ell n\, 5} = 12.426$$

$$(\dot{m})_{water} \times 4.2 \times 1000 \times (95-75) = 1 \times 1000 \times 1 \times 12.426$$

$$(\dot{m})_{water} = 0.1479 \text{ kg/s}$$

Answer 0.147 to 0.149 kg/s

10. Two large parallel planar walls are maintained at 1000 K and 500 K. Parallel radiation shields are to be installed between the two walls. Assume that the emissivities of the walls and the shields are equal. If the melting temperature of the shields is 900 K, the maximum number of shield(s) that can be installed between the walls is (are)

(A) 3 (A) 0 (C) 1 (D) 2

Key: (D)

Sol: $\frac{Q_{with}}{Q_{without}} = \frac{1}{N+1}$ …(1)

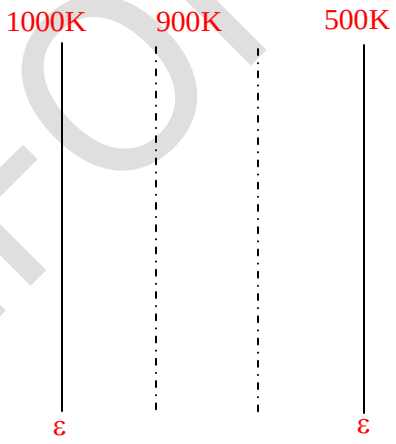

$$Q = \frac{\sigma\left(T_1^4 - T_2^4\right)}{\frac{1-\varepsilon}{A\varepsilon} + \frac{1}{AF_{12}} + \frac{1-\varepsilon}{A\varepsilon}}$$

Solving, $\boxed{Q = \frac{\sigma A\left(T_1^4 - T_2^4\right)}{\frac{2}{\varepsilon} - 1}}$ …(2)

If radiation shield is present

Then $T_1 = 1000 \text{ K}$, and $T_{shield} = 900 \text{ K}$

If there is no radiation shield,

$T_1 = 1000 \text{ K}, T_2 = 500 \text{ K}$

$$\frac{Q_{with\ shield}}{Q_{without\ sheild}} = \frac{T_1^4 - T_{shield}^4}{T_1^4 - T_2^4} = \frac{(1000)^4 - (900)^4}{(1000)^4 - (500)^4} = \frac{1-(0.9)^4}{1-(0.5)^4} = \frac{0.3439}{0.9375} = 0.366827$$

Putting values in equation (1)

$$0.366827 = \frac{1}{N+1} \Rightarrow N+1 = 2.72 \Rightarrow N = 1.72$$

$\therefore N \cong 2$

$\therefore$ Answer is (D)

© All rights reserved by Thinkcell Learning Solutions Pvt. Ltd. No part of this booklet may be reproduced or utilized in any form without the written permission

11. Consider two stationary spherical pure water droplets of diameters d_1 and $2d_1$. CO_2 diffuses into the droplets from the surroundings. If the rate of diffusion of CO_2 into the smaller droplet is W_1 mol s^{-1}, the rate of diffusion of CO_2 into the larger droplet is

(A) W_1 (A) $2W_1$ (C) $4W_1$ (D) $0.5W_1$

Key: (C)

Sol: Rate of diffusion is spherical droplet $\alpha.m^2$

$$\therefore \quad \frac{\text{Rate of diffusion small}}{\text{Rate of diffusion large}} = \frac{\mu_1^2}{r_2^2} = \frac{d_1^2}{d_2^2}$$

Rate of diffusion small = W_1 as per data

$$\text{So, } \frac{W_1}{\text{Rate of diffusion large}} = \frac{d_1^2}{(2d_1)^2} \quad [\because d_2 = 24]$$

$$\Rightarrow \text{Rate of diffustion large} = 4W_1$$

Answer (C)

12. Consider a horizontal rod of radius aR (a < 1) in a stationary pipe of radius R. The rod is pulled coaxially at a constant velocity V as shown in the figure. The annular region is filled with a Newtonian incompressible fluid of viscosity μ. The steady state fully developed axial velocity profile in the fluid is given by $u(r) = v\frac{\ln(r/R)}{\ln(a)}$, where r is the radial coordinate. Ignoring end effects, the magnitude of the pulling force per unit rod length is

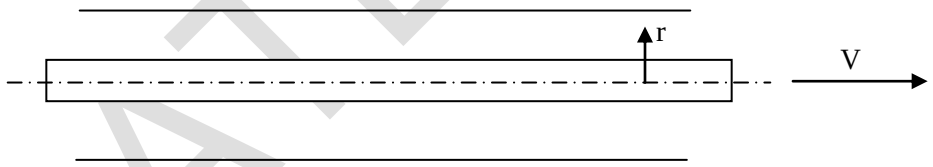

(A) $-\frac{2\pi\mu V}{\ln(A)}$ (A) $\pi\mu V$ (C) 0 (D) $-\frac{\pi\mu V}{\ln(a)}$

Key: (A)

Sol: Force per unit length

$$\frac{F}{L} = \tau \times 2\pi r = -\mu\frac{dV}{dr} \times 2\pi r$$

The velocity profile is given as

© All rights reserved by Thinkcell Learning Solutions Pvt. Ltd. No part of this booklet may be reproduced or utilized in any form without the written permission

$$u(r)=\frac{V\ell n\left(\frac{r}{R}\right)}{\ell n\, a}$$

So, $\frac{du}{dr}=\frac{V}{\ell n\, a}\frac{d}{dr}G\left(\frac{r}{R}\right)=\frac{V}{\ell n\, a}\times\frac{1}{r}$

$\therefore \quad \frac{F}{L}=-\mu\left(\frac{V}{r\,\ell n\, a}\right)\times 2\pi r=\frac{-2\pi\mu V}{\ell n\, a}$

Hence answer is (A).

13. An elementary irreversible liquid-phase reaction, $2A\rightarrow B$, is carried out under isothermal conditions in a 1 m^3 ideal plug flow reactor (PFR) as shown in the figure. The volumetric flow rate of fresh A. ν_1 = 10 m^3h^{-1}, and its concentration C_{A1} = 2 kmol m^{-3}. For a recycle ratio R = 0 , the conversion of A at location 2 with respect to the fresh feed (location 1) is 50%. For $R\rightarrow\infty$, the corresponding conversion of A is _____% (rounded off to one decimal place).

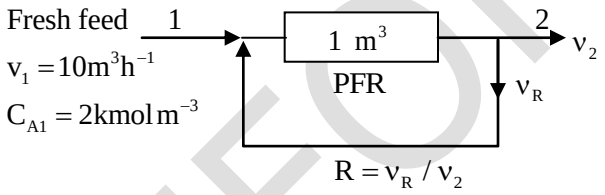

Key: (38.7 to 39.1)

Sol: Given, $2A\rightarrow B$, elementary liquid phase mention

For R = 0, PFR gives 50% conversion

For $R=\infty$, conversion = ?

For $R=\infty$, PFR is converted to CSTR.

Since it is elementary liquid phase r × n

$\varepsilon_A=0$, and r × n is second order r × n

$-r_A=kCA_A^2$

Performance equation for PFR

$$\tau_P=C_{Ao}\int_0^{X_A}\frac{dX_A}{-r_A}$$

$$\tau_P=C_{Ao}\int_0^{X_A}\frac{dX_A}{kC_{Ao}^2(1-X_A)^2}$$

Solving $\boxed{k\tau C_{Ao}=\frac{X_A}{1-X_A}}$ ...(1)

© All rights reserved by Thinkcell Learning Solutions Pvt. Ltd. No part of this booklet may be reproduced or utilized in any form without the written permission

Putting $X_A = 0.5$,

$$\boxed{k\tau C_{Ao} = 1} \qquad \ldots(2)$$

For $R = \infty$, the performance equation of the reactor is that of CSTR

$$\tau_m = \frac{C_{Ao} X_A}{k C_{Ao}^2 (1 - x_A)^2}$$

$$\boxed{k\tau_m C_{Ao} = \frac{X_A}{(1 - X_A)^2}} \qquad \ldots(3)$$

Since, volume and the inlet flow rate to the reactor is same in both cases

So, $\tau_P = \tau_n$

$\therefore \boxed{k\tau_m C_{Ao} = 1}$

Putting value in equation (3),

$$\frac{X_A}{(1 - X_A)^2} = 1$$

One solving $X_A = 0.389 = 38.9\%$

Answer: 38.7% to 39.1%

14. For a single component system at vapor-liquid equilibrium, the extensive variables A, V, S and N denote the Helmholtz free energy, volume, entropy. and number of moles. respectively. in a given phase. If superscripts (v) and (*l*) denote the vapor and liquid phase, respectively, the relation that is NOT CORRECT is

(A) $\left(\frac{\partial A^{(\ell)}}{\partial V^{(\ell)}}\right)_{T,N^{(\ell)}} = \left(\frac{\partial A^{(v)}}{\partial V^{(v)}}\right)_{T,N^{(v)}}$

(A) $\left(\frac{A+TS}{N}\right)^{(\ell)} = \left(\frac{A+TS}{N}\right)^{(v)}$

(C) $\left(\frac{A+PV}{N}\right)^{(\ell)} = \left(\frac{A+PV}{N}\right)^{(v)}$

(D) $\left(\frac{\partial A^{(\ell)}}{\partial N^{(\ell)}}\right)_{T,V^{(\ell)}} = \left(\frac{\partial A^{(v)}}{\partial N^{(v)}}\right)_{T,V^{(v)}}$

Key: **(B)**

Sol: $U - TS = A$

$U = A + TS$

From option B, $\left(\frac{U}{N}\right)^L = \left(\frac{U}{N}\right)^V$

Hence Answer is (B).

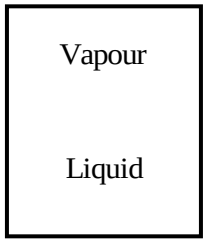

$G^L = G^V$

$T^L = T^V$

$P^L = P^V$

© All rights reserved by Thinkcell Learning Solutions Pvt. Ltd. No part of this booklet may be reproduced or utilized in any form without the written permission

15. Consider a single-input-single – output (SISO) System with the transfer function

$$G_P(s)=\frac{2(s+1)}{\left(\frac{1}{2}s+1\right)\left(\frac{1}{4}s+1\right)}$$

Where the time constants are in minutes. The system is forced by a unit step input at time t=0. The time at which the output response reaches the maximum is _____ minutes (rounded of two decimal places).

Key: (0.5 to 0.6)

Sol: $G_p(s)=\frac{2(s+1)}{\left(\frac{s}{2}+1\right)\left(\frac{s}{4}+1\right)}=\frac{16(s+1)}{(s+2)(s+4)}$

For step change $X(s)=\frac{1}{s}$.

$$Y(s)=\frac{16(s+1)}{(s+2)(s+4)}\times\frac{1}{s}$$

$$\lim_{t\to\infty}Y(t)=\lim_{s\to0}\ SY(s)=\lim_{s\to0}\frac{16(s+1)}{(s+2)(s+4)}=\frac{6}{2\times4}=2$$

Ultimate value of response is 2.

$$Y(s)=\frac{16}{(s+2)(s+4)}+\frac{16}{s(s+2)(s+4)}$$

$$=8\left[\frac{s+4-(s+2)}{(s+2)(s+4)}\right]+\frac{16}{6}\left[\frac{(s+2)+(s+4)-2s}{s(s+2)(s+4)}\right]$$

$$=8\left[\frac{1}{s+2}-\frac{1}{s+4}\right]+\frac{16}{6}\left\{\frac{1}{s(s+4)}+\frac{1}{s(s+2)}-\frac{2}{(s+2)(s+4)}\right\}$$

Taking inverse Laplace transform

$$y(t)=8\left[e^{-2t}-e^{-4t}\right]+\frac{16}{6}\left\{\frac{1}{4}-\frac{e^{-4t}}{4}+\frac{1}{2}-\frac{e^{-2t}}{2}-e^{-2t}+e^{-4t}\right\}$$

$$y(t)=8e^{-2t}-8e^{-4t}+\frac{3}{4}\times\frac{16}{6}-4e^{-2t}+2e^{-4t}$$

$$=4e^{-2t}-6e^{-4t}+2$$

Maximum value of Y(t) will reach when $\frac{dY(t)}{dt}=0$

© All rights reserved by Thinkcell Learning Solutions Pvt. Ltd. No part of this booklet may be reproduced or utilized in any form without the written permission

$$\frac{dY(t)}{dt} = -8e^{-2t} + 24e^{-4t}$$

$$\Rightarrow 24e^{-4t} = 8e^{-2t}$$

$$\Rightarrow 3e^{-4t} = e^{-2t}$$

$$\Rightarrow 3e^{-2t} = 1$$

$$\Rightarrow e^{-2t} = \frac{1}{3}$$

$$\Rightarrow -2t = \ell n\frac{1}{3}$$

$$\Rightarrow t = 0.55 \text{ min}$$

Answer is 0.5 to 0.6 min.

16. A cylindrical fin of 24mm is attached horizontally to a vertical planar wall. The heat transfer rate from the fin to the surrounding air is 60% of the heat transfer rate if the entire fin were at the wall temperature. If the fin effectiveness is 10. Its length is _____mm (rounded off to the nearest integer).

Key: (98 to 102)

Sol: Data given

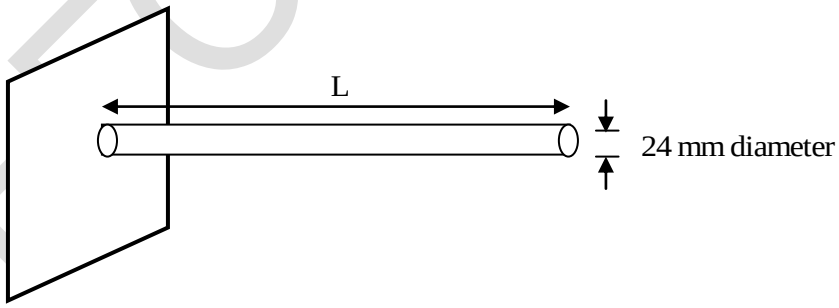

$\eta_{fin} = 60\% = 0.6$

Effectiveness of fin = 10

From formulae

$$\eta_{fin} = \frac{q_{fin}}{q_{fin,max}}$$

$$\text{Effectiveness of fin} = \frac{q_{fin}}{q_{without\ fin}}$$

Now, $q_{fin} = \eta_{fin} \times q_{fin,\,max}$

Hence we can write,

$$\text{Effectiveness of fin} = \frac{\eta_{fin} \times q_{fin,\,max}}{q_{without\ fin}}$$

Putting values,

$$10 = \frac{0.6 \times q_{fin,\,max}}{q_{without\ fin}} = \frac{0.6 \times h \times A_S \times \theta_b}{h \times A_C \times \theta_b}$$

Where A_C is surface area of fin.

© All rights reserved by Thinkcell Learning Solutions Pvt. Ltd. No part of this booklet may be reproduced or utilized in any form without the written permission

A_C is cross sectional area of wall.

θ_b is the base temperature.

$A_s = \pi \times \left(\frac{24}{1000}\right) \times L$, where L is the length of fin in mts.

$A_C = \frac{\pi}{4}\left(\frac{24}{1000}\right)^2$

Hence, $10 = \frac{0.6 \times h \times \pi\left(\frac{24}{1000}\right) L \times \theta_b}{h \times \frac{\pi}{4}\left(\frac{24}{1000}\right)^2 \times \theta_b}$

$\frac{100}{6} = \frac{4L}{\left(\frac{24}{1000}\right)}$

$\Rightarrow L = 0.1\,m = 100\,mm$

Answer: 98 mm to 102 mm

17. For a pure substance, the following data at saturated conditions are given:

In P^{sat} (bar)	T (K)
0.693	350
1.386	370

Assume that the vapor phase behaves ideally. the molar volume of the liquid is negligible, and the latent heat of vaporization is constant over the given temperature range. The universal gas constant, R = 8.314 J K^{-1} mol^{-1}. From the above data, the estimated latent heat of vaporization at 360 K is _____ kJ/mol (rounded off to one decimal place).

Key: (36.9 to 37.7)

Sol: Latent heat of vaporization can be calculated using the formula

$\ell n\left(\frac{P_1 sat}{P_2 sat}\right) = \frac{\Delta H_R}{R}\left[\frac{1}{T_2} - \frac{1}{T_1}\right]$

Data given in question,

$P_1^{sat} = 0.693\,bar, \quad P_2^{sat} = 1.386\,bar$

$T_1 = 350\,K, T_2 = 370\,K.$

Putting values,

© All rights reserved by Thinkcell Learning Solutions Pvt. Ltd. No part of this booklet may be reproduced or utilized in any form without the written permission

$$\ell n\left(\frac{0.0693}{1.386}\right)=\frac{\Delta H_R}{8.314}\left[\frac{1}{370}-\frac{1}{350}\right]$$

$$\Rightarrow -0.693=\Delta H_R\left(-1.857\times10^{-5}\right)$$

$$\Delta H_R=37306.3\,\text{Joules/mol}=37.3\,\text{kJ/mol}$$

Answer : 36.9 kJ/mol to 37.7 kJ/mol

18. In a constant-rate cake filtration operation. the collected filtrate volumes are 120 m^3 and 240 m^3 at 1 min and 2 min respectively. Assume the cake resistance to be constant and the filter medium resistance to be negligible. If the pressure-drop across the cake is 10 kPa at 1 min. its value at 2 min is _____ kPa (rounded off to the nearest integer).

Key: (20)

Sol: Given in questions,

Constant Rate Filtration

$t_1=1\,\text{min}, \quad V_1=120\ m^3$

$t_2=2\,\text{min}, \quad V_2=240\ m^3$

$\Delta P_1=10\,\text{kPa}$

$\Delta P_2=?$

We know, $t\propto V;\ t\propto \Delta P$

$$\therefore \frac{t_1}{t}=\frac{V_1}{V_2}=\frac{\Delta P_1}{\Delta P_2}$$

Putting values, $\frac{1}{2}=\frac{10}{\Delta P_2}$

$$\Rightarrow \Delta P_2=20\,\text{kPa}$$

Answer 20 kPa to 20 kPa

19. Consider a sphere of radius 4, centered at the origin, with outward unit normal $\hat{n}$ on its surface S. The value of the surface integral $\iint\left(\frac{2x\hat{i}+3y\hat{j}+4z\hat{k}}{4\pi}\right)\bullet\hat{n}dA$ is _____(rounded off to one decimal place).

Key: (192)

Sol: S is a closed surface and $\vec{F}=\frac{2x\hat{i}+3y\hat{j}+4z\hat{k}}{4\pi}$ is a 3-D vector

$\Rightarrow$ Gauss-divergence theorem is applicable

© All rights reserved by Thinkcell Learning Solutions Pvt. Ltd. No part of this booklet may be reproduced or utilized in any form without the written permission

$$\therefore \quad \iint_S \vec{F}.\hat{n}dA = \int_V div\vec{F}dV$$

$$= \int_V \frac{1}{4\pi}\left(\frac{\partial}{\partial x}(2x)+\frac{\partial}{\partial y}(3y)+\frac{\partial}{\partial z}(4z)\right)dV$$

$$= \frac{9}{4\pi}\int_v dV = \frac{9}{4\pi}V, \text{ Where V is volume of sphere with radius} = 4$$

$$= \frac{9}{4\pi}\times\left(\frac{4\pi}{3}(4^3)\right) = 192$$

20. Given matrix $A = \begin{bmatrix} x & 1 & 3 \\ y & 2 & 6 \\ 3 & 5 & 7 \end{bmatrix}$ the ordered pair (x,y) for which det(A)=0 is

(A) (2, 1) (A) (1,2) (C) (2, 2) (D) (1, 1)

Key: (B)

Sol: $\det(A) = 0 \Rightarrow x(14-30)-y(7-15)+3(6-6) = 0$

$\Rightarrow -16x-8y = 0 \Rightarrow y = 2x$

$x = 1, y = 2$ satisfies the equation

$\therefore$ Option (B).

21. Information for a proposed greenfield project is provided in the table. The discounted cash flow for the fourth year is Rs. _____ crores (rounded off to one decimal place)

Fixed capital investment (excluding lan(D)	Rs 250 crores
Salvage value	Rs 0
Yearly revenue from product sales	Rs 120 crores
Yearly manufacturing cost (excluding depreciation)	Rs 30 crores
Interest rate	10% compounded annually
Annual taxation rate	30 %
Depreciation method	Double declining balance*
	Over seven years
Plant start – up	2 years after project initiation

*$d_k = \frac{2}{7}BV_{k-1}$ k: years post start-up d: Depreciation amount BV: Book value.

© All rights reserved by Thinkcell Learning Solutions Pvt. Ltd. No part of this booklet may be reproduced or utilized in any form without the written permission

Key: (48.363)

Sol: Depreciation for fourth year

$$d_4 = \frac{2}{T} BV_3$$

$$BV_3 = V_o (1-f)^3$$

By double defining balance method,

$$f = \frac{2}{n} = \frac{2}{7}$$

$$\therefore BV_3 = V_o \left(1-\frac{2}{7}\right)^3 = 91.10 \text{ crores}$$

$$d_4 = \frac{2}{7} \times 91.10 = 26.03 \text{ crores}$$

Tax deduction for fourth year = (Net sales – manufacturing cost – depreciation for fourth year) $\times \frac{30}{100}$

$$= (120 - 30 - 26.03) \times \frac{30}{100} = 19.191 \text{ crores}$$

$\therefore$ Discounted cash flow

$$= \left[(120 - 30 - 26.03) - \text{tax paid} + \text{depreciation}\right] / (1+i)^4$$

$$= \frac{70.809}{(1.1)^4} \text{ crores} = 48.363 \text{ crores}$$

22. Consider interphase mass transfer of a species S between two immiscible liquids A and B. The interfacial mass transfer coefficient of S in liquid A is twice of that in liquid B. The equilibrium distribution of S between the liquids is given by $y_S^A = 0.5 y_S^B$ where y_S^A and y_S^B. are the mole-fractions of S in A and B, respectively. The bulk phase mole-fraction of S in A and B is 0.10 and 0.02. respectively. If the steady-state flux of S is estimated to be 10 kmol h^{-1} m^{-2}, the mass transfer coefficient of S in A is _____ kmol h^{-1} m^{-2} (rounded off to one decimal place).

Key: (210 to 232)

Sol

$$K_A = 2 K_B$$

$$y_s^A = 0.5\, y_s^B$$

$$y_A^S = 0.1$$

$$y_B^S = 0.02$$

$$N_A = k_A (0.10 - y_{si}^A) = K_B (y_{si}^B - 0.02)$$

$$\Rightarrow 2K_B (0.10 - y_{si}^A) = K_B (y_{si}^B - 0.02) \quad [\because K_A = 2 K_B]$$

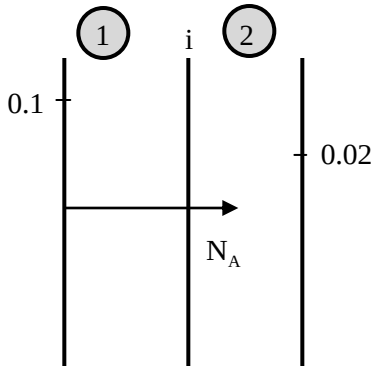

© All rights reserved by Thinkcell Learning Solutions Pvt. Ltd. No part of this booklet may be reproduced or utilized in any form without the written permission

$$\Rightarrow 2\left(0.10-y_{si}^{A}\right)=\left(y_{si}^{B}-0.02\right)$$

$$y_{si}^{B}=0.11 \qquad \left[\because y_{si}^{A}=0.5\,y_{si}^{B}\right]$$

$$y_{si}^{A}=0.5(0.11)=0.055$$

$$N_A=0.5(0.11)=0.055$$

$$N_A=10=k_A\left(0.10-0.055\right)=0.045\,K_A$$

$$\therefore K_A=\frac{10}{0.045}=222.2\ \text{kmol/hr}$$

Answer 210 to 232 kmol/hr.

23. In the block diagram shown in the figure, the transfer function $G=\dfrac{K}{(\tau s+1)}$ with K>0 and τ>0. The maximum value of K below which the system remains stable is _____ (rounded off two decimal places).

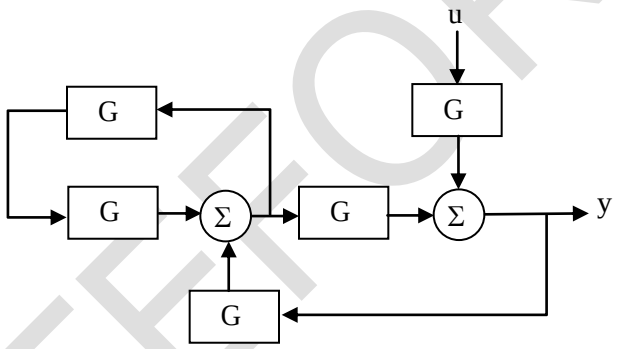

Key: (0.707)

Sol:

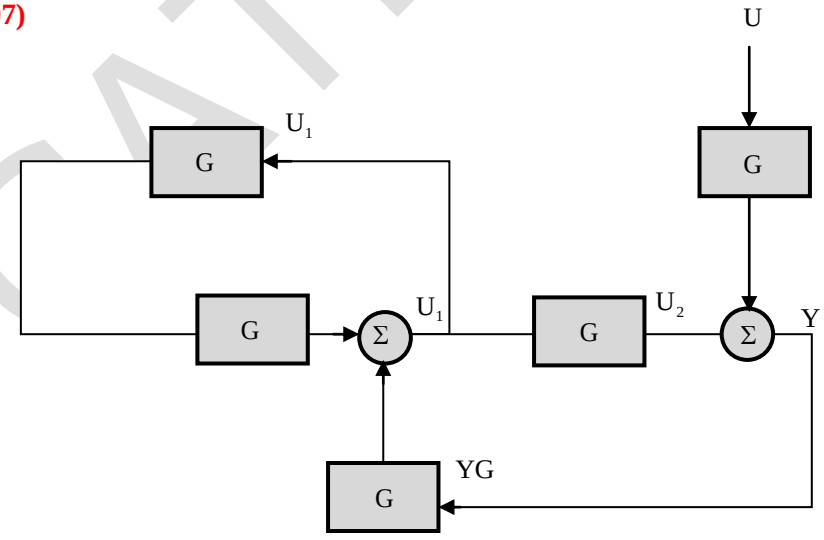

© All rights reserved by Thinkcell Learning Solutions Pvt. Ltd. No part of this booklet may be reproduced or utilized in any form without the written permission

$$G = \frac{k}{\tau_s + 1}$$

From diagram,

$U_1 = YG + U_1G^2$ …(1)

$U_2 = U_1G$ …(2)

$Y = U_2 + UG$ ….(3)

From (1), $U_1 = \frac{YG}{1-G^2}$

Putting equation is (2)

$$U_2 = \frac{YG^2}{1-G^2}$$

Putting U_2 in (3)

$$Y = \frac{YG^2}{1-G^2} + UG$$

$$\Rightarrow Y\left(1 - \frac{G^2}{1-G^2}\right) = UG$$

$$\Rightarrow Y\left(\frac{1-2G^2}{1-G^2}\right) = UG$$

$$\Rightarrow \frac{Y}{U} = \frac{G\left(1-G^2\right)}{1-2G^2}$$

For the system to remain stable

$1 - 2G^2 = 0$

Putting $G = \frac{K}{\tau s + 1}$

$\tau^2 s^2 + 2\tau s + 1 - 2k^2 = 0$

From Routh array $k = \frac{1}{\sqrt{2}} = 0.707$

GATEFORUM

© All rights reserved by Thinkcell Learning Solutions Pvt. Ltd. No part of this booklet may be reproduced or utilized in any form without the written permission

24. Choose the option that correctly pairs the given measurement devices with the quantities they measure.

S No	Measurement Device	S No	Measured Quantity
I	Bourdon Gauge	A	Temperature
II	Orifice Plate meter	B	Concentration
III	Pyrometer	C	Pressure
IV	Colorimeter	D	Flow rate
V	Pirani Gauge	E	Liquid level

(A) I-D II-C III-A IV – E V-C (A) I-C II-D III-A IV-B V-C

(C) I-E II-C III-D IV-B V-A (D) I-C II-D III-E IV-A V-D

Key: (B)

Sol: Bourdon gauge $\rightarrow$pressure

Orifice plate meter $\rightarrow$Flow rate

Pyrometer $\rightarrow$temperature

Colorimeter $\rightarrow$Concentration

Pirani gauge $\rightarrow$pressure

So, I-C, II-D, III-A, IV-B, V-C

Hence answer (B).

25. The chemical formula of Glauber's salt, used in the Kraft process, is

(A) $Na_2CO_3.10H_2O$ (A) $Na_2HPO_4.2H_2O$ (C) $Na_2S_2O_4.2H_2O$ (D) $Na_2SO_4.10H_2O$

Key: (D)

Sol: Glauber salt is the decahydrate form of sodium sulphate.

Hence, chemical formula is $Na_2SO_4.10\,H_2O$

26. The equation $\frac{dy}{dx} = xy^2 + 2y + x - 4.5$ with the initial condition y(x=0)=1 is to be solved using a predictor-corrector approach. Use a predictor based on the implicit Euler's method and a corrector based on the trapezoidal rule of integration, each with a full-step size of 0.5 Considering only positive values of y, the value of y at x=0.5 is _____ (rounded off to three decimal places).

Key: (0.875)

Sol: We have $f(x,y) = xy^2 + 2y + x - 4.5$, $y_0 = 1$, $x_0 = 0$ (initial condition) and h = 0.5 is step size, $y(0.5) = ?$

© All rights reserved by Thinkcell Learning Solutions Pvt. Ltd. No part of this booklet may be reproduced or utilized in any form without the written permission

By Implicit Euler's method (Predictor),

$y_1 = y_0 + hf(x_1, y_1) \Rightarrow y_1 = 1 + 0.5f(0.5, y_1)$

$\Rightarrow \quad y_1 = 1 + \frac{1}{2}\left[\frac{1}{2}y_1^2 + 2y_1 + 0.5 - 4.5\right] = 1 + \frac{1}{4}y_1^2 + y_1 - 2 \Rightarrow y_1^2 = 4 \Rightarrow y_1 = 2$

(Since y value of positive)

By Trapezoidal rule of integration,

$y_1^c = y_0 + \frac{h}{2}\left[f(x_0, y_0) + f(x_1, y_1)\right]$, Where C is corrector

$\Rightarrow \quad y_1^C = 1 + \frac{1}{4}\left[f(0,1) + f\left(\frac{1}{2}, 2\right)\right]$

$= 1 + \frac{1}{4}\left[(2 - 4.5) + 2(2 + 4 + 0.5 - 4.5)\right]$

$= 1 - \frac{1}{8} = \frac{7}{8} = 0.875$, is the value of y at $x = 0.5$

(Here, $x_1 = x_0 + h = 0.5; y_1^C = y(x_1) = y(0.5)$)

27. Consider a bare long copper wire of 1mm diameter. Its surface temperature is T_s and the ambient temperature is $T_a (T_s > T_a)$. The wire is to be coated with a 2mm thick insulation. The convective heat transfer coefficient is 20W $m^{-2}K^{-1}$. Assume that T_s and T_a remain unchanged. To reduce heat loss from the wire. The maximum allowed thermal conductivity of the insulating material. In W $m^{-2}K^{-1}$, rounded off to two decimal places, is

(A) 0.04 (A) 0.02 (C) 0.10 (D) 0.01

Key: (D)

Sol: To reduce heat loss from wire

$r_C \le R_o$, where r_C is the critical radius of insulation

For copper wire, $r_C = \frac{k}{h}$

$\frac{k_{max}}{h} = R_o$

$\Rightarrow k_{max} = 0.5 \times 10^{-3} \times 20 = 0.01\,W/m/K$

Answer is (D).

© All rights reserved by Thinkcell Learning Solutions Pvt. Ltd. No part of this booklet may be reproduced or utilized in any form without the written permission

28. In an enzymatic reaction, an inhibitor (I) competes with the substrate (S) to bind with the enzyme (E), thereby reducing the rate of product (P) formation. The competitive inhibition follows the reaction mechanism shown below. Let [S] and [I] be the concentration of S and I, respectively, and r_s be the rate of consumption of S. Assuming pseudo-steady state, the correct plot of $\frac{1}{-r_s}$ vs $\frac{1}{[s]}$ is

$$E + S \underset{k_2}{\overset{k_1}{\rightleftharpoons}} E.S \xrightarrow{k_3} E + P$$

$$E + I \underset{k_2}{\overset{k_1}{\rightleftharpoons}} E.I$$

(A)

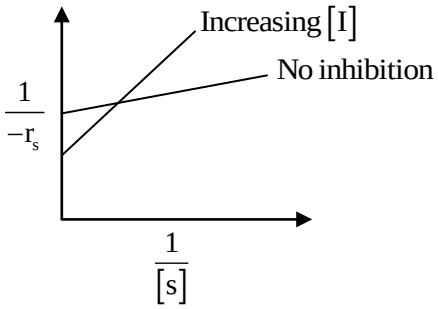

(A)

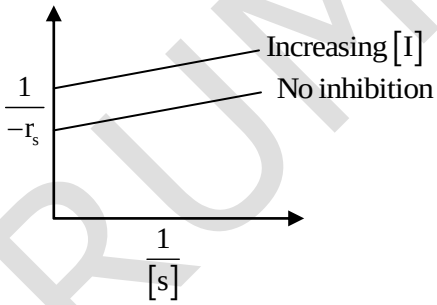

(C)

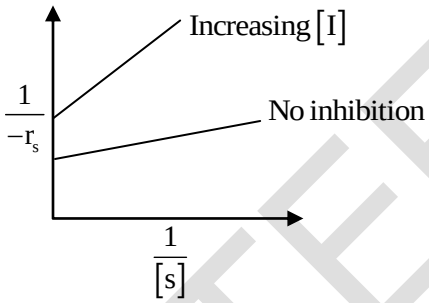

(D)

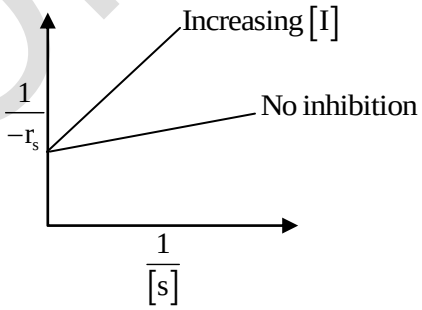

Key: (D)

Sol: The graph of r × n rate vs substrate concentration

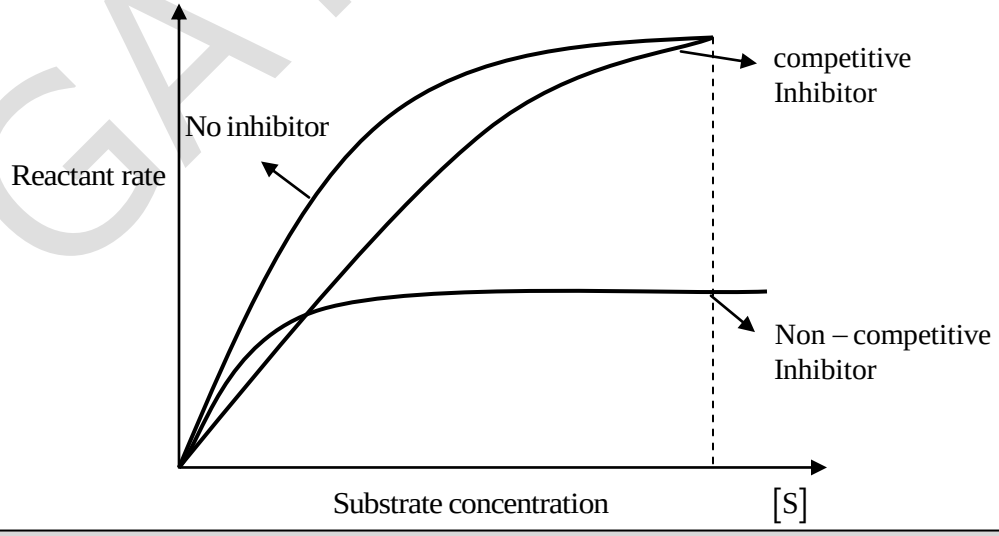

© All rights reserved by Thinkcell Learning Solutions Pvt. Ltd. No part of this booklet may be reproduced or utilized in any form without the written permission

Clearly with increasing substrate concentration, the reaction rate increases.

When substrate concentration is very high,

Reaction rate is equal for competitive

Inhibition and no inhibition.

Hence, for $[s] \to \infty \left[\frac{1}{s}\right] \to 0$

$\therefore$ Correct answer is (D).

29. Consider turbulent flow in a pipe under isothermal conditions. Let r denote the radial coordinate and z denoted the axial flow direction. On moving away from the wall towards the center of the pipe, the rz-component of the Reynolds stress

(A) Only increases

(A) Decreases and then increases

(C) Remains unchanged

(D) Increases and then decreases

Key: (*)

30. The reaction $A \to B$ is carried out isothermally on a porous catalyst. The intrinsic reaction rate is kC_A^2, where k is the rate constant and C_A is the concentration of A. If the reaction is strongly pore-diffusion controlled, the observed order of the reaction is

(A) 3/2 (A) 1 (C) $\sqrt{2}$ (D) 2

Key: (A)

Sol: Intrinsic rate $-r_A = kC_A^2$

For strong pore diffusion,

Observed order of reaction $= \frac{n+1}{2}$

Here n = 2

$\therefore$ Observed order of $r \times n = \frac{2+1}{2} = \frac{3}{2}$

© All rights reserved by Thinkcell Learning Solutions Pvt. Ltd. No part of this booklet may be reproduced or utilized in any form without the written permission

31. Match the product in Group-1 with the manufacturing process in Group-2. The correct combination is

Group-I	Group-2
P. Nitric acid	**1.** Trona process
Q. Phosphoric acid	**2.** Twitchell process
R. Potassium chloride	**3.** Ostwald's process
S. Stearic acid	**4.** Haifa process

(A) P-III, Q-I, R-IV, S-II

(A) P-I, Q-IV, R-II, S-III

(C) P-III, Q-IV, R-I, S-II

(D) P-IV, Q-I, R-II, S-III

Key: (C)

Sol: Nitric Acid $\rightarrow$ Ostwald' process

Phosphoric acid $\rightarrow$Haifa process

Potassium chloride $\rightarrow$Trona process

Stearic acid $\rightarrow$Twitchell process

P-III, Q-IV, R-I, S-II.

32. The dry-bulb temperature of air in a room is 30°C. The Antoine equation for water is given as

$$\ln P^{sat} = 12.00 - \frac{4000}{T - 40}$$

Where T is the temperature in K and P^{sat} is the saturation vapor pressure in bar. The latent heat of vaporization of water is 2000 kJ kg^{-1}. The humid heat is 1.0 kJ kg^{-1}, K^{-1}, and the molecular weights of air and water are 28kg $kmol^{-1}$ and 18 kg $kmol^{-1}$, respectively. If the absolute humidity of air is Y' kg moisture per kg dry air, then for a wet-bulb depression of 9°C, 1000× Y' =_____(rounded off to one decimal place).

Key: (31880 to 31900)

Sol: Antoine equation is given as

$$\text{In } P^{sat} = 12 - \frac{4000}{T - 40}$$

Wet bulb depression is

$$T_{DB} - T_{WB} = \frac{\lambda_o}{Pr\, C_A}\left[Y_s' - Y'\right]$$

Y_s' is saturation humidity which is given as

© All rights reserved by Thinkcell Learning Solutions Pvt. Ltd. No part of this booklet may be reproduced or utilized in any form without the written permission

$$Y_S' = \frac{18}{29} \times \frac{P^{sat}}{P^T - P^{sat}}$$

Water boils at 100°C and $P_T = 1\,atm = 101.3\,kPa$

$$\therefore \quad \ln P^{sat} = 12 - \frac{4000}{334.15 - 40}$$

$$\therefore \quad P^{sat} = 99.3\,kPa$$

$$\therefore \quad Y_s' = \frac{18}{28} \times \frac{99.3}{101.3 - 99.3} = 31.931$$

$Pr = 0.7$ for air – water system.

Also, $T_{DB} - T_{WB} = 9°C \left[\because \text{Wet bulb depression}\right]$

Putting values,

$(31.931 - Y') = 0.0405$

$Y' = 31.8905$

$\therefore 1000 \times Y' = 31890.5$

Answer: 31880 to 31900.0

33. Let $f(x) = e^{-|x|}$, where x is real. The value of $\frac{df}{dx}$ at $x = -1$ is

(A) e (A) 1/e (C) -1/e (D) -e

Key: (B)

Sol: Method-I:

Let $x < 0$ then $|x| = -x \Rightarrow f(x) = e^x$

$$\frac{df}{dx} = e^x\Big|_{x=-1} \quad (\text{since } x = -1 < 0)$$

$$= e^{-1} = \frac{1}{e}$$

Method II:

$$f(x) = e^{-|x|} \Rightarrow \frac{df}{dx} = -e^{-|x|} \times \frac{d}{dx}(|x|)$$

$$= -e^{-|x|}, \frac{|x|}{x}$$

GATEFORUM

© All rights reserved by Thinkcell Learning Solutions Pvt. Ltd. No part of this booklet may be reproduced or utilized in any form without the written permission

$\therefore$ At x = 1, $\frac{df}{dx} = -e^{-1} \times \left(\frac{1}{-1}\right)$ $\left(\because |-1| = 1;\ \frac{d}{dx}\left(|x| = \frac{|x|}{x}\right)\right)$

$\therefore$ Option (B).

34. A single-effect evaporator with a heat transfer area of $70m^2$ concentrates a salt solution using steam. The salt solution feed rate and temperature are 10000kg h^{-1} and 40°C respectively. The saturated steam feed rate and temperature are 7500kgh^{-1} and 150°C, respectively. The boiling temperature of the solution in the evaporator is 80°C. The average specific heat of the solution is 0.8kcal $kg^{-1}K^{-1}$. The latent heat of vaporization is 500 kcal kg^{-1}. If the steam -economy is 0.8, the overall heat transfer coefficient is _____kcal $h^{-1}m^2K^{-1}$ (rounded off to the nearest integer).

Key: (670 to 686)

Sol: Steam economy (E) = 0.8

WE know, $E = \frac{V}{S}$

$0.8 = \frac{V}{7500}$ $\left[\because S = 7500\ kg/hr\right]$

$\therefore$ V = 600 kg/hr

Energy balance equation

$Q = S\lambda_S = V\lambda_V + FC_P(T - T_F)$

$\lambda_V = 500\ kcal/kg$

$C_P = 0.8\ kcal/kg/k$

Putting all the values

$Q = 6000 \times 500 \times 10^3 + 10000 \times 0.8 \times 1000 \times (80 - 40)$

$= 3.32 \times 10^9\ cal/hr$

Again $Q = UA(T_S - T)$

Steam is entering at a temperature of 150°C.

So, $Q = U \times 70 \times (150 - 80)$ $\left[\because A = 70\ m^2\right]$

Equating both sides,

$3.32 \times 10^4 = U \times 70 \times 70$

$\therefore$ $U = 677.55 \times 10^3\ cal/m^2/hr = 677.55\ kcal/m^2/hr$

Answer 670 to 686 $kcal/m^2/hr$

© All rights reserved by Thinkcell Learning Solutions Pvt. Ltd. No part of this booklet may be reproduced or utilized in any form without the written permission

35. In soap manufacturing, the triglycerides present in oils and fats are hydrolyzed to mainly produce

(A) Glycerol only

(A) Glycerol and paraffins

(C) Fatty acids and glycerol

(D) Fatty acids only

Key: (C)

Sol: Triglycerides on hydrolysis procedure fatty acid and glycerol.

Hence answer is (C).

36. The molar excess Gibbs free energy (g^E) of a liquid mixture of A and B is given by

$$\frac{g^E}{RT} = x_A x_B \left[C_1 + C_2\left(x_A - x_B\right)\right]$$

Where x_A and x_B are the mole fraction of A and B, respectively, the universal gas constant, $R=8.314 JK^{-1}$, T is the temperature in K, and C_1C_2 are temperature-dependent parameters. At 300K, $C_1=0.45$ and $C_2=-0.018$. If γ_A and γ_B are the activity coefficients of A and B, respectively, the value of

$$\int_0^1 \ln\left(\frac{\gamma_A}{\gamma_B}\right) dx_A$$

at 300K and 1 bar is _____ (rounded off to the nearest integer)

Key: (0)

Sol: Given,

$$\frac{g^E}{RT} = x_A x_B \left[C_1 + C_2\left(x_A - x_B\right)\right] \quad \ldots(1)$$

At 300 K, $C_1 = 0.45, C_2 = -0.018$

We know

$$\frac{G^E}{RT} = x_1 \ell n\, \gamma_1 + x_2 \ell n\, \gamma_2$$

$$d\left(\frac{G^E}{RT}\right) = \ell n\left(\frac{\gamma_1}{\gamma_2}\right)$$

For this question,

$$\frac{d}{dX_A}\left(\frac{G^E}{RT}\right) = \ell n\left(\frac{\gamma_A}{\gamma_B}\right)$$

$$\frac{d}{dx_A}\left\{x_A x_B\left[C_1 + C_2\left(x_A - x_B\right)\right]\right\}$$

© All rights reserved by Thinkcell Learning Solutions Pvt. Ltd. No part of this booklet may be reproduced or utilized in any form without the written permission

$$= \frac{d}{dx_A}\left\{x_A(1-x_A)\left[C_1 + C_2(2x_A - 1)\right]\right\}$$

$$= \frac{d}{dx_A}\left\{C_1 x_A(1-x_A) + C_2 x_A(1-x_A)(2x_A-1)\right\}$$

$$= \frac{d}{dx_A}\left\{C_1 x_A(1-x_A)\right\} + C_2\frac{d}{dx_A}\left\{x_A(1-x_A)(2x_A-1)\right\}$$

$$= C_1\left[(1-x_A) - x_A\right] + C_2\left[(1-x_A)(2x_A-1) - x_A(2x_A-1) + 2x_A(1-x_A)\right]$$

$$= C_1\left[1-2x_A\right] + C_2\left[(2x_A-1)(1-2x_A) + 2x_A(1-x_A)\right]$$

$$= C_1(1-2x_A) + 2C_2 x_A(1-x_A) - C_2(1-2x_A)^2$$

$$\int_0^1 \ell n\left(\frac{\gamma_A}{\gamma_B}\right)dX_A = C_1\left[x_A - x_A^2\right]_0^1 + 2C_2\left[\frac{x_A^2}{2} - \frac{x_A^3}{3}\right]_0^1 - C_2\left[x_A + \frac{4}{3}x_A^3 - 2x_A^2\right]_0^1$$

$$= C_1[0] + 2C_2\left[\frac{1}{6}\right] - C_2\left[1 + \frac{4}{3} - 2\right]$$

$$= \frac{C_2}{3} - \frac{C_2}{3} = 0$$

37. A wet solid containing 20% (w/w) moisture (based on mass of bone-dry soli(D) is dried in a tray-dryer. The critical moisture content of the solid is 10% (w/w). The drying rate (kg $m^{-2}s^{-1}$) is constant for the first 4 hours, and then decreases linearly to half the initial value in the next 1 hour. At the end of 5 hours of drying. The percentage moisture content of the solid is _____%(w/w) (rounded off to one decimal place).

Key: (8.5 to 9.0)

Sol: For constant rate period,

$$\theta_C = \frac{L_S}{AN_C}(X_1 - X_e)$$

$$4 = \frac{L_S}{AN_C}(0.2 - 0.1)$$

$$\Rightarrow \boxed{\frac{L_S}{AN_C} = 40} \quad ...(1)$$

The diagram for drying rate is as shown

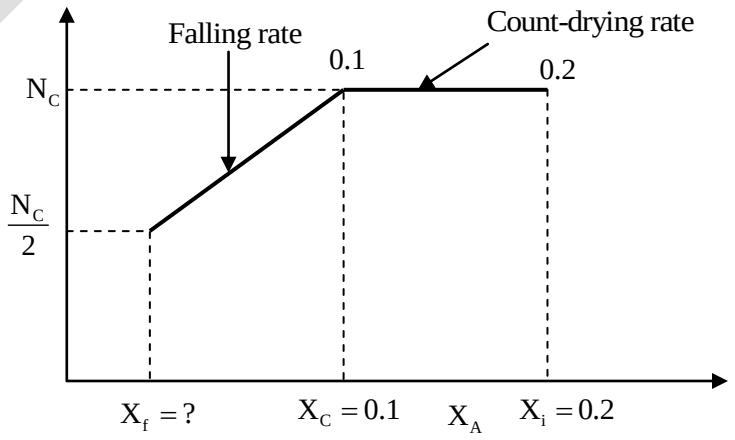

Clearly out of total 5 hours, 4 hours is under constant drying rate and last 1 hr is under falling rate condition.

© All rights reserved by Thinkcell Learning Solutions Pvt. Ltd. No part of this booklet may be reproduced or utilized in any form without the written permission

For falling rate period,

$$N_f = -\frac{L_S}{A}-\frac{dX}{dt}$$

$$\Rightarrow \int_0^1 dt = \int_{x_f}^{0.1} \frac{L_S}{A}\frac{dX}{N_f}$$

$$\Rightarrow 1 = \frac{L_S}{A}.\frac{1}{N_f}\int_{x_f}^{0.1} dx$$

$$\frac{AN_f}{L_S} = \left[0.1 - X_f\right] \qquad ...(2)$$

Now, $N_f = \frac{N_C}{2}$ [As per question]

$$\therefore \quad \frac{AN_f}{L_S} = \frac{AN_C}{2L_S} = \frac{1}{80}\left[\text{Putting value from (1)}\right]$$

$\therefore$ Putting values in (2),

$$1 = 80\left(0.1 \times X_f\right)$$

$$X_1 = 0.0875 \text{ or } 8.75\%$$

Answer: (8.5%) to 9.0%

38. 5 moles of liquid benzene,8 moles of liquid toluene and 7moles of liquid xylene are mixed at 25°C and 1 bar. Assuming the formation of an ideal solution and using the universal gas constant $R = 8.314 J\,mol^{-1}\,K^{-1}$, the total entropy change is _____ JK^{-1} (rounded off to one decimal place).

Key: (177 to 183)

Sol: $\Delta S_{min}^{id} = -R\sum x_i \ell n\, x_i$

Mixture has 5 mol benzene (A)

8 mole toluene (B) and 7 mol of xylene (C)

$$\therefore \quad x_A = \frac{5}{(5+7+8)} = 0.25$$

$$x_B = \frac{8}{20} = 0.4$$

$$x_C = \frac{7}{20} = 0.35$$

© All rights reserved by Thinkcell Learning Solutions Pvt. Ltd. No part of this booklet may be reproduced or utilized in any form without the written permission

$$\Delta S_{mix}^{id} = -R\left[0.25\,\ell n\,0.25 + 0.4\,\ell n\,0.4 + 0.35\,\ell n\,0.35\right]$$
$$= R\left[0.346 + 0.3665 + 0.3675\right]$$
$$= 8.978\ J/k/mol$$

Total entropy change $= (\text{Total mole}) \times \Delta S_{mix}^{id} = 20 \times 8.978 = 179.56$

Answer: 177 to 183 J/K

39. The partial differential equation

$$\frac{\partial u}{\partial t} = \frac{1}{\pi^2}\frac{\partial^2 u}{\partial x^2}$$

Where, $t \geq 0$ and $x \in [0,1]$, is subjected to the following initial and boundary conditions:

$u(x,0) = \sin(\pi x)$

$u(0,t) = 0$

$u(1,t) = 0$

The value of t at which $\frac{u(0.5,t)}{u(0.5,0)} = \frac{1}{e}$ is

(A) 1/e (A) 1 (C) e (D) π

Key: (B)

Sol: Method-I:

We know that $\frac{\partial u}{\partial t} = c^2\frac{\partial^2 u}{\partial x^2}$ …(1) is called standard one-dimensional heat equations and its solution is

$u(x,t) = (A\cos px + B\sin px)e^{-p^2c^2t}$ …(2)

Comparing the given PDE with equation (1), we have $C = \frac{1}{\pi}$

Using $u(0,t) = 0$ and $u(1,t) = 0$, we get $A = 0, p = n\pi$

∴ The must general solution of (1) satisfying given boundary conditions is

$u(x,t) = \sum_{n=1}^{\infty} b_n \sin(n\pi x)e^{-n^2t}$ …(3)

Using initial condition: $u(x,0) = \sin(\pi x)$, equation (3) gives

$\sin(\pi x) = \sum_{n=1}^{\infty} b_n \sin(n\pi x)$

© All rights reserved by Thinkcell Learning Solutions Pvt. Ltd. No part of this booklet may be reproduced or utilized in any form without the written permission

$\Rightarrow \sin(\pi x) = b_1 \sin(\pi x) + b_2 \sin(2\pi x) + \ldots$

$\therefore b_1 = 1, b_2 = b_3 = \ldots = 0$

$\therefore$ (3) becomes $u(x,t) = \sin(\pi x)e^{-t}$

$$\frac{u(0.5,t)}{u(0.5,0)} = \frac{1}{e} \text{ gives } \frac{\sin\left(\frac{\pi}{2}\right)e^{-t}}{\sin\left(\frac{\pi}{2}\right)e^{-0}} = \frac{1}{e} \Rightarrow e^{-t} = e^{-i}$$

$\therefore t = 1$, option B

Method-II:

Given PDE is $\frac{\partial u}{\partial t} = \frac{1}{\pi^2}\frac{\partial^2 u}{\partial x^2}$ …(1)

Let $u(x,t) = X(x)T(t)$ ….(2) be the solution of (1)

Using $u(x,0) = \sin(\pi x), (2)$ gives

$\sin(\pi x) = X(x).T(0) \Rightarrow X(x) = \sin(\pi x)$ and $T(0) = 1$

$\therefore u = \sin \pi x.T(t)$

$\Rightarrow \frac{\partial u}{\partial t} = \sin \pi x.T'(t); \frac{\partial^2 u}{\partial x^2} = -\pi^2 \sin \pi x.T(t)$

$\therefore (1) \Rightarrow \sin \pi x T'(t) = \frac{1}{\pi}\left[-\pi^2 \sin \pi x.T(t)\right]$

$\Rightarrow \frac{T'(t)}{T(t)} = -1$. Integrating w.r.t t, we get

$\ell n(T(t)) = -t + C \Rightarrow T(t) = e^{-t+C}$

Using $T(0) = 1$, we get

$1 = e^C \Rightarrow C = 0$

$\therefore T(t) = e^{-t} \Rightarrow u(x,t) = e^{-t} \sin \pi x$

$$\therefore \frac{u(0.5,t)}{u(0.5,0)} = \frac{1}{e} \Rightarrow \frac{e^{-t}\sin\frac{\pi}{2}}{e^0 \sin\frac{\pi}{2}} = \frac{1}{e} \Rightarrow e^{-t} = e^{-1} \Rightarrow t = 1$$

$\therefore$ Option B

© All rights reserved by Thinkcell Learning Solutions Pvt. Ltd. No part of this booklet may be reproduced or utilized in any form without the written permission

40. Consider the tank level control system shown in the figure, where the cross-section area of the tank is A. Assume perfect flow controllers (F(C). The level controller (L(C) is proportional-integral (PI). For an integral time, τ_I, the level controller gain, K_c is tuned for critical damping. The value of $\frac{K_c\tau_1}{A}$ is _____ (rounded off to the nearest integer).

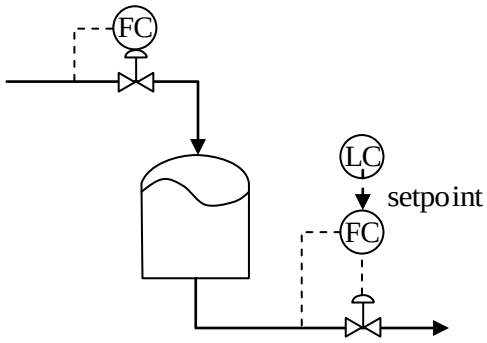

Key: (*)

41. The appropriate feedforward compensator, G_{ff}, in the shown block diagram is

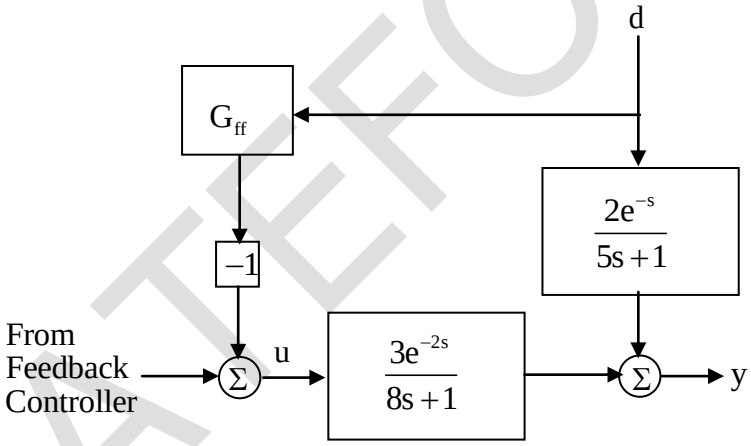

(A) $G_{ff} = -\frac{2}{3}\frac{(8s+1)}{(5s+1)}$

(A) $G_{ff} = \frac{3}{2}\frac{(5s+1)}{(8s+1)}e^{-s}$

(C) $G_{ff} = -\frac{3}{2}\frac{(5s+1)}{(8s+1)}e^{-1}$

(D) $G_{ff} = \frac{2}{3}\frac{(8s+1)}{(5s+1)}$

Key: (*)

© All rights reserved by Thinkcell Learning Solutions Pvt. Ltd. No part of this booklet may be reproduced or utilized in any form without the written permission

Sol: From the block diagram,

$$\left(\frac{3e^{-2s}}{8s+1}\right)u+\left(\frac{2e^{-S}}{5s+1}\right).d=y$$

For perfect disturbance rejection in case of regulatory problem,

$$G_{ff}=\frac{\left(\frac{2e^{-s}}{5s+1}\right)}{\left(\frac{3e^{-2s}}{8s+1}\right)}=\frac{2}{3}e^{s\left(\frac{8s+1}{5s+1}\right)}=\frac{2}{3}\left(\frac{8s+1}{5s+1}\right).e^{s}$$

None of the answers are matching.

42. The value of the real variable $x\geq 0$, which maximizes the function $f(x)=x^{e}e^{-x}$ is

(A) 0 (A) e (C) 1 (D) 1/e

Key: (B)

Sol: $f(x)=x^{e}e^{-x}\Rightarrow f'(x)=-x^{e}e^{-x}+e^{-x}\left(e.x^{e-1}\right)$

$$f'(x)=0\Rightarrow e^{-x}x^{e}\left(-1+\frac{e}{x}\right)=0$$

$$\Rightarrow -1+\frac{e}{x}=0\Rightarrow x=\underset{\geq 0}{e} \text{ is the only stationary point}$$

$\therefore$ $\boxed{f''(x)<0 \text{ when } x=e}\Rightarrow f(x)$ has maximum value at $x=e$, option B.

43. Two reservoirs located at the same altitude are connected by a straight horizontal pipe of length 120m and inner diameter 0.5m, as shown in the figure. A pump transfers the liquid of density 800kg m^{-3} at a flow rate of $1m^3s^{-1}$ from Reservoir-1 to Reservoir-2. The liquid levels in Reservoir-1 and Reservoir-2 are 2m and 10m, respectively, Assume that the reservoirs' cross-section areas are large enough to neglect the liquid velocity at the top of the reservoirs. All minor losses can be ignored. The acceleration due to gravity is 9.8ms^{-2}. If the friction factor for the pipe-flow is 0.01, the required power of the pump is _____kW (rounded off to one decimal place).

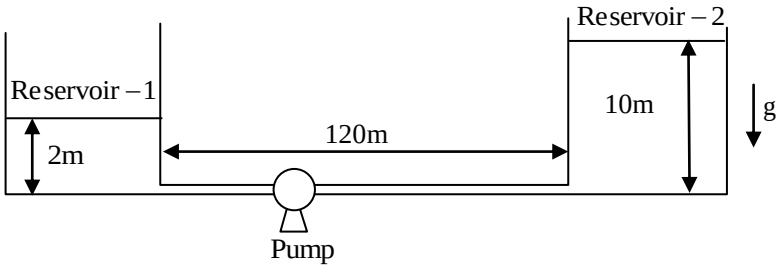

© All rights reserved by Thinkcell Learning Solutions Pvt. Ltd. No part of this booklet may be reproduced or utilized in any form without the written permission

Key: (161.8 to 163)

Sol: The engineering Bernoulli's equation between

Reversion 1 and reservoir 2 is:

$$\frac{P_1}{\rho g}+\frac{V_1^2}{2g}+Z_1+\eta h_P=\frac{P_2}{\rho g}+\frac{V_2^2}{2g}+Z_2+h_f$$

Hence, $\eta h_P=\left(z_q-z_1\right)+h_f$

$$h_f=4f\left(\frac{L}{D}\right)\frac{V^2}{2g}$$

$$V=\frac{Q}{A}=\frac{1}{\frac{\pi}{4}(0.5)^2}=5.095\ \text{m/s}$$

$$h_f=4\times0.01\times\left(\frac{120}{0.5}\right)\times\frac{(5.095)^2}{2\times9.8}=12.714\ \text{m}$$

$$\eta h_P=12.714+(10-2)\text{m}=20.714\ \text{m}$$

n = 1 assuming 100% efficiency

Required power of pump $=(Q_P)\times g\times h_P$

$=1\times9.8\times800\times20.714$

$=162397\ \text{W}$

$=162.39\ \text{kW}$

Answer: 161.8 kW to 163 kW

44. Catalytic reforming is commonly used in the petroleum industry to improve fuel quality. The undesirable reaction in the catalytic reforming of naphtha is

(A) Cyclization of paraffins

(A) Hydrocracking of paraffins

(C) Dehydrogenation of naphthenes

(D) Isomerization of naphthenes

Key: (B)

Sol: Catalytic reforming of naphtha is carried out to increase the octane number of gasoline which involves the formation of aromatic compounds on the other hand, hydrocracking of paraffins will lead to reduction is octane number. Hence, hydro cracking of paraffin is the undesirable reaction in catalytic reforming of naphtha.

Hence answer (B).

© All rights reserved by Thinkcell Learning Solutions Pvt. Ltd. No part of this booklet may be reproduced or utilized in any form without the written permission

45. A horizontal cylindrical water jet of diameter D_1 = 2 cm strikes a vertical solid plate with a hole of diameter D_2=1cm, as shown in the figure. A part of the jet passes through the hole and the rest is deflected along the plate. The density of water is 1000kg m^{-3}. If the speed of the jet is 20m s^{-1}, the magnitude of the horizontal force, in N, required to hold the plate stationary is .

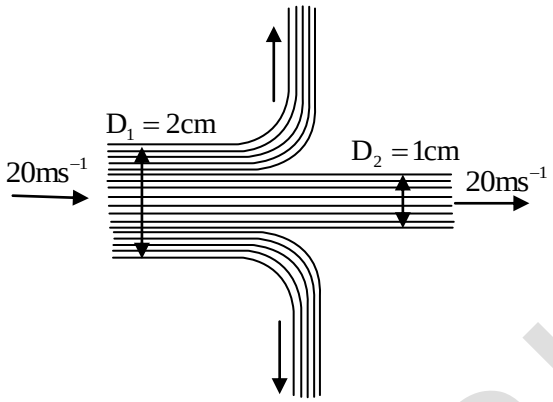

(A) 5π (A) 20π (C) 30π (D) 10π

Key: (C)

Sol:

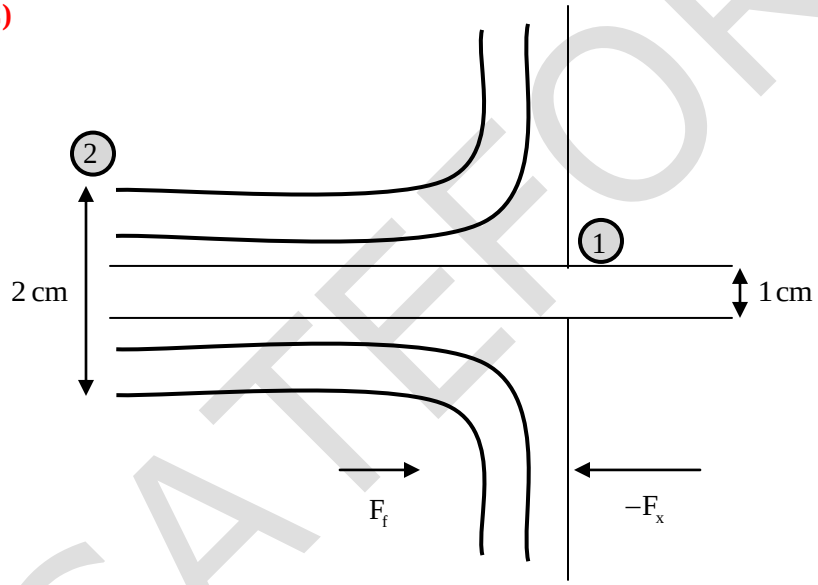

Applying linear momentum equation

$$\sum F_f = PQV_2 - PQV_1 = P\left[A_2V_2^2 - A_1V_1^2\right]$$

$$V_1 = V_2$$

Now, $V_1 = V_2$

$$\therefore \sum F_f = P(A_2 - A_1)V^2$$

GATEFORUM

© All rights reserved by Thinkcell Learning Solutions Pvt. Ltd. No part of this booklet may be reproduced or utilized in any form without the written permission

$A_2 = \frac{\pi}{4}(0.02)^2$

$A_1 = \frac{\pi}{4}(0.01)^2$

and $V = 20\ m/s$ [For forward force by water jet]

Putting values,

$$\sum F_f = 1000 \times \left[\frac{\pi}{4}(0.02)^2 - \frac{\pi}{4}(0.01)^2\right] \times 20^2 = 30\pi$$

To hold the plate stationary

$\sum F_f = F_x \qquad [\because F_x \text{ is force req}]$

$\therefore F_x = 30\pi$

Answer (C)

46. An elementary irreversible gas-phase reaction, $A \rightarrow B + C$, is carried out at fixed temperature and pressure in two separate ideal reactors: (i) a $10m^3$ plug flow reactor (PFR), (ii)a $10m^3$ continuous-stirred tank reactor (CSTR). If pure A is fed at $5m^3h^{-1}$ to the PFR operating at 400K, the conversion is 80%. If a mixture of 50 mol% of A and 50 mol% of an inert is fed at 5 m^3h^{-1} to the CSTR operating at 425K, the conversion is 80%. The universal gas constant R=8.34J $mol^{-1}K^{-1}$. Assuming the Arrhenius rate law, the estimated activation energy is _____ kJ mol^{-1} (rounded off to one decimal place).

Key: (9.2 to 9.6)

Sol: $A \rightarrow B + C$ (Gas phase r × n)

For elementary r × n

Order of r × n = 1

Consider PFR as 1st system and CSTR as second system.

Considering PFR (system L)

$$k\tau = (1+\varepsilon_A)\ell n\left(\frac{1}{1-X_A}\right) - \varepsilon_A X_A$$

For PFR, pure A is used

$$\varepsilon_A = \delta y_{Ao} = \delta = \frac{2-1}{1} = 1$$

$$k_{PFR} \times \tau = (1+1)\ln\left(\frac{1}{1-0.8}\right) - 1 \times 0.8$$

$$\tau_{PFR} = \frac{V}{V_o} = \frac{10}{5} = 2 \text{ hrs}$$

© All rights reserved by Thinkcell Learning Solutions Pvt. Ltd. No part of this booklet may be reproduced or utilized in any form without the written permission

$k_{PFR} \times 2 = 2\ell n(5) - 0.8 = 2.418$

$k_{PFR} = 1.209\ hr^{-1}$

Considering CSTR (System 2)

$$k_{CSTR}\tau = \frac{C_{Ao} \times A}{\frac{C_{Ao}(1-X_A)}{1+(\varepsilon_A)_{CSTR} X_A}}$$

$(\varepsilon_A)_{CSTR} = \delta y_{Ao} = \delta \times 0.5 [\because$ CSTR has 50% A and 50% mol inert feed$]$

$$= \frac{2-1}{1} \times 0.5 = 0.5$$

$$K_{CSTR}\tau = \frac{\frac{0.8}{1-0.8}}{1+0.5\times 0.8} = \frac{4}{1.4} = 2.857$$

$$k_{CSTR} \times \frac{10}{5} = 2.857$$

$\Rightarrow k_{CSTR} = 1.428\ hr^{-1}$

From Asthenias equation

$$\ell n\left(\frac{k_2}{k_1}\right) = \frac{E}{R}\left(\frac{1}{T_1} - \frac{1}{T_2}\right)$$

$k_2 = k_{CSTR};\ k_1 = k_{PFR}$

$T_1 = 400\ K;\ T_2 = 425\ K$

Putting the values,

$$0.1664 = \frac{E}{8.314} \times (1.4705 \times 10^{-4})$$

$E = 9407.45\ J/mol = 9.4\ kJ/mol$

47. A substance at 4°C has a thermal expansion coefficient $\beta = \frac{1}{\nu}\left(\frac{\partial \nu}{\partial T}\right)_P = 0K^{-1}$, an isothermal compressibility, $K_T = -\frac{1}{\nu}\left(\frac{\partial \nu}{\partial P}\right)_T = 5\times 10^{-4}\ Pa^{-1}$ and a molar volume $\nu = 18\times 10^{-6}\ m^3 mol^{-1}$. If S is the molar entropy, then at 4°C, the quantity $\left[\nu\left(\frac{\partial s}{\partial \nu}\right)_T\right]$ evaluated for the substance is _____ J $mol^{-1}K^{-1}$ (rounded off to the nearest integer).

© All rights reserved by Thinkcell Learning Solutions Pvt. Ltd. No part of this booklet may be reproduced or utilized in any form without the written permission

Key: (0 to 0)

Sol: Maxwell relation is given as

$$\left(\frac{\partial S}{\partial V}\right)_T = \left(\frac{\partial P}{\partial T}\right)_V$$

We know $\frac{dV}{V} = \beta dT - \alpha dP$

Since, the substance has constant volume

Hence, $\beta dT - \alpha dP = 0$

$$\therefore \quad \left(\frac{dP}{dT}\right)_V = \frac{\beta}{\alpha} = 0 \quad [\because \beta = 0 \text{ as per question}]$$

Hence, $\left(\frac{\partial S}{\partial V}\right)_T = 0$

$$\therefore \gamma\left(\frac{\partial S}{\partial V}\right)_T = 0$$

48. An equimolar binary mixture is to be separated in a simple tray- distillation column. The feed rate is 50kmol min^{-1}. The mole fractions of the more volatile component in the top and bottom products are 0.90 and 0.01, respectively. The feed as well as the reflux stream are saturated liquids, On application of the Mc Cable-Thiele method, the operating line for the stripping section is obtained as

Y=1.5x - 0.005

Where y and x are the mole fractions of the more volatile component in the vapor and liquid phases, respectively. The reflux ratio is _____ (rounded off to two decimal places).

Key: (0.61 to 0.65)

Sol: Overall material balance

$F = D + W$ …(1)

Component balance

$F_{XF} = Dx_D + Wx_W$ …(2)

Solving (1) and (2)

$D = 27.53\ kmol/min$

$W = 22.47\ kmol/min$

Equation for stripping section is

$$y_{m+1} = \left(\frac{R_V + 1}{R_V}\right)x_m - \frac{x_W}{R_v}$$

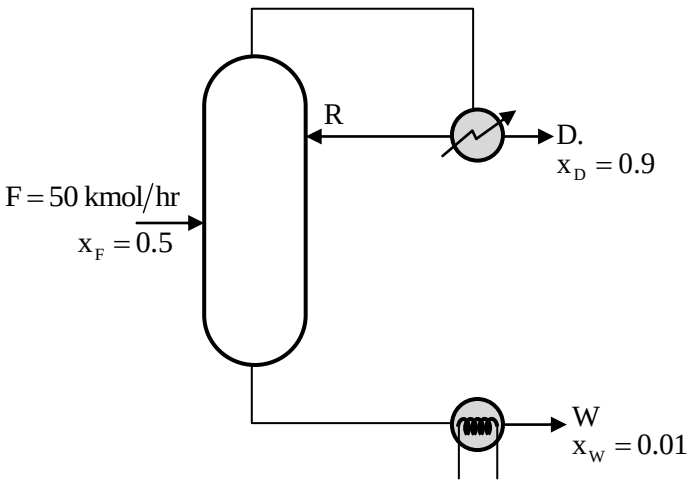

© All rights reserved by Thinkcell Learning Solutions Pvt. Ltd. No part of this booklet may be reproduced or utilized in any form without the written permission

Comparing it with equation $y = 1.5x - 0.005$

$$\frac{R_V + 1}{R_V} = 1.5 \Rightarrow R_V = 2$$

Again, $R_V = \dfrac{\bar{V}}{W}$

$$\Rightarrow \bar{V} = 2 \times 22.47 \text{ kmol/min} = 44.944 \text{ kmol/min}$$

Equation across the feed plate for vapour phase,

$$V = \bar{V} + (1 - q)F$$

For saturated liquid, q = 1

So, $V = \bar{V}$

$$\therefore V = 44.944 \text{ kmol/min}$$

Material balance across condenser

V = L + D

$$\therefore \quad L = (44.944 - 27.53) \text{kmol/min} = 17.414 \text{ kmol/min}$$

Refuse ratio $= \dfrac{L}{D} = \dfrac{17.414}{27.53} = 0.63$

Answer 0.61 to 0.65.

49. A control system on the jacket side of a reactor is shown in the figure. Pressurized water flows through the jacket to cool the reactor. The heated water flashes in the boiler. The exothermic reaction heat thus generates steam. Fresh boiler feed water (BFW) is added to make-up for the loss of water as steam. Assume that all control valves are air-to-open. The controller action, 'direct' or 'reverse', is defined with respect to the controller. Select the option that correctly specifies the action of the controllers.

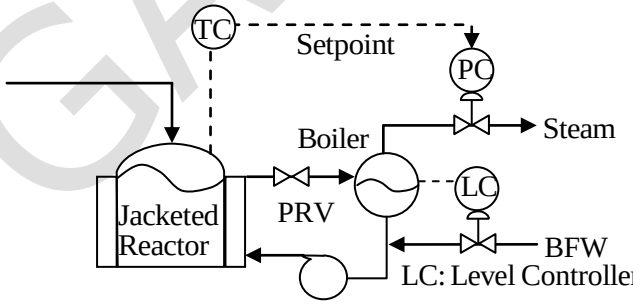

LC: Level Controller

PC: Pressure Controller

TC: Temperature Controller

PRV: PressureReducing Value

© All rights reserved by Thinkcell Learning Solutions Pvt. Ltd. No part of this booklet may be reproduced or utilized in any form without the written permission

(A) PC : Reverse, LC : Direct, TC : Direct
(A) PC : Direct, LC : Reverse, TC : Reverse
(C) PC : Direct, LC : Reverse, TC : Direct
(D) PC: Reverse, LC: Direct, TC: Reverse

Key: (B)

Sol: Direct acting controller is one whose output tender to increase as measurement signal increases.

Reverse acting controller is one whose output tends to decrease as measurement signal increases.

From diagram, it is clear that LC closes on high level and open in low water level. Hence LC is reverse acting controller.

In case line pressure for steam line is high, PC will open to maintain pressure.

Hence PC is direct acting controller.

Temperature of reaction is maintained by TC.

In case of temperature wire in reactor, TC will tend to reduce the reactor temperature TC is reverse acting controller.

Hence, Answer is (B).

50. Consider the process flowsheet in the figure. An irreversible liquid-phase reaction $A \rightarrow B$ (reaction rate $-r_A = 164x_A$ kmolm^{-3}h^{-1}) occurs in a 1 m^3 continuous stirred tank reactor (CSTR), where x_A is the mole fraction of A. A small amount of inert, I, is added to the reactor. The reactor effluent is separated in a perfect splitter to recover pure B product down the bottoms and a B-free distillate. A fraction of the distillate is purged and the rest in recycled back to the reactor. At a particular steady state, the product rate is 100 kmolh^{-1}, the recycle rate is 200kmol h^{-1} and the purge rate is 10kmol h^{-1}. Given the above information, the inert feed rate into the process is _____ kmol h^{-1} (rounded off to two decimal places).

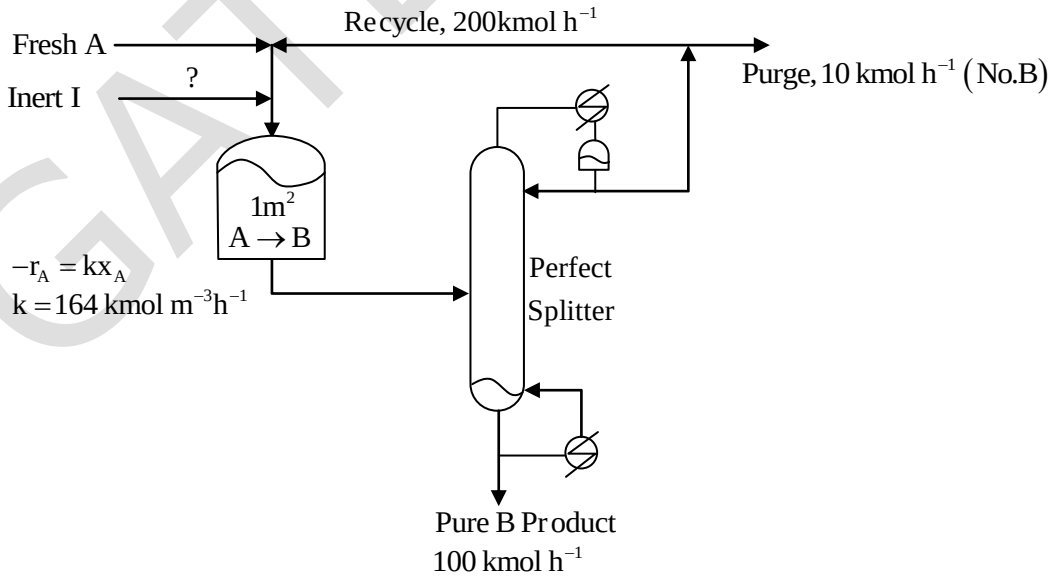

Key: (*)

© All rights reserved by Thinkcell Learning Solutions Pvt. Ltd. No part of this booklet may be reproduced or utilized in any form without the written permission

51. A process described by the transfer function $G_P(s)=\dfrac{(10s+1)}{(5s+1)}$

is forced by a unit step input at time t=0. The output value immediately after the step input (at $t=0^+$) is _____ (rounded off to the nearest integer).

Key: (2)

Sol: $G_P(s)=\dfrac{10s+1}{5s+1}$

If step input is introduced in system,

$$X(s)=\frac{1}{s}$$

$$Y(s)=\left(\frac{10s+1}{5s+1}\right)\times\frac{1}{s}=\left(\frac{10+\frac{1}{s}}{5+\frac{1}{s}}\right)\times\frac{1}{s}$$

Using initial value theorem,

$$\lim_{t\to 0}Y(t)=\lim_{s\to\infty}sY(s)=2$$

52. A venturi meter (venturi coefficient, $C_v=0.98$) is connected to a pipe of inner diameter 50mm. Water (density 1000kg m^{-3}) is flowing through the pipe. The pressure-drop measured across the venturi meter is 50kPa. If the venturi throat diameter is 20mm, the estimated flow rate of water is _____ $\times 10^{-3} m^3 s^{-1}$ (rounded off to two decimal places)

Key: (3.0 to 3.22)

Sol: Velocity at the venture throat,

$$\bar{V}_b=\frac{C_V}{\sqrt{1-\beta^4}}\sqrt{\frac{2(P_A-P_B)}{\rho}}$$

$$\beta=\text{Diameter ratio}=\frac{d_b}{d_a}=\frac{20}{50}=0.4$$

$$\bar{V}_b=\frac{0.98}{\sqrt{1-(0.4)^4}}\sqrt{\frac{2\times 50\times 1000}{1000}}=-9.92\,m/s$$

$$\text{Flow rate of water}=A_b\times\bar{V}_b=\frac{\pi}{4}\left(\frac{20}{1000}\right)^2\times 9.92=3.114\times 10^{-3}\,m^3/s$$

Answer 3.0 to 3.22

© All rights reserved by Thinkcell Learning Solutions Pvt. Ltd. No part of this booklet may be reproduced or utilized in any form without the written permission

53. The directional derivative of $f(x,y,z)=4x^2+2y^2+z^2$ at the point (1,1,1) in the direction of the vector $\vec{v}=\hat{i}-\hat{k}$ is _____ (rounded off to two decimal places)

Key: (4.242)

Sol: $\nabla f = \text{grad}(f) = \hat{i}\frac{\partial f}{\partial x} = \hat{j}\frac{\partial f}{\partial y} + \hat{k}\frac{\partial f}{\partial z}$

$$= (8x)\hat{i} + (4y)\hat{j} + (2z)\hat{k}\Big|_{(1,1,1)}$$

$$= 8\hat{i} + 4\hat{j} + 2\hat{k}$$

$\hat{e}$ = unit vector in the direction of $\vec{V} = \frac{\hat{i}-\hat{k}}{|\hat{i}-\hat{k}|} = \frac{1}{\sqrt{2}}(\hat{i}-\hat{k})$

$\therefore$ The directional derivative required is $\hat{e}.\nabla f$

$$= \frac{1}{\sqrt{2}}(\hat{i}-\hat{k}).(8\hat{i}+4\hat{j}+2\hat{k})$$

$$= \frac{1}{\sqrt{2}}(8-2) = \frac{6}{\sqrt{2}} = 3\sqrt{2} \approx 4.242$$

54. Saturated steam condenses on a vertical plate maintained at a constant wall temperature. If x is the vertical distance from the top edge of the plate, then the local heat transfer coefficient $h(x) \propto \Gamma(x)^{-1/3}$, where $\Gamma(x)$ is the local mass flow rate of the condensate per unit plate width. The ratio of the average heat transfer coefficient over the entire plate to the heat transfer coefficient at the bottom of the plate is

(A) 4 (A) 3/4 (C) 4/3 (D) 3

Key: (C)

Sol: $$h_{vertical} = 0.943\left[\frac{gP_L(P_L-P_V)h_{fg}k_L^3}{\mu_L(T_{sat}-T_S)L}\right]^{1/4}$$

$$h\Big|_{x=L} = \left[\frac{gP_L(P_L-P_V)h_{fg}k_L^3}{4\mu_C(T_{sat}-T_S)x}\right]^{1/4}$$

$$\therefore \quad \frac{h_{vertical}}{h\Big|_{x=L}} = 0.943\times(4)^{1/4} = \frac{4}{3}$$

55. Liquide flowing through a heat exchanger (HX) is heated. A bypass stream is provided to control the temperature of the heated exit stream. From the given plumbing options, the one that provides the most effective temperature control for large disturbances while avoiding vaporization in the heat exchanger is

© All rights reserved by Thinkcell Learning Solutions Pvt. Ltd. No part of this booklet may be reproduced or utilized in any form without the written permission

(A)

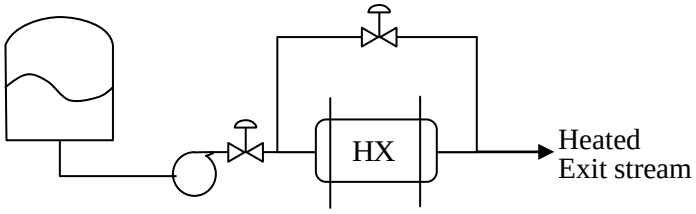

(B)

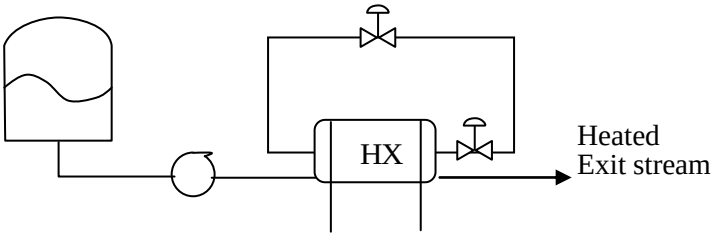

(C)

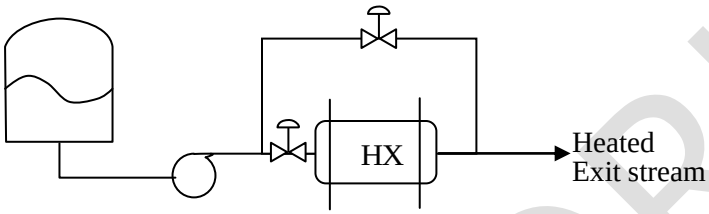

(D)

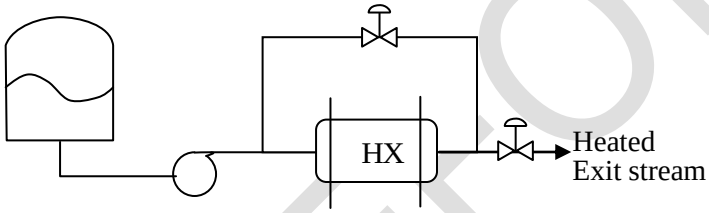

Key: (C)

Sol: Heat transfer control configuration with bypass stream aims at keeping exit stream temperature at desired value by manipulating the flow rate of inlet stream and the bypass stream.

The effective configuration is

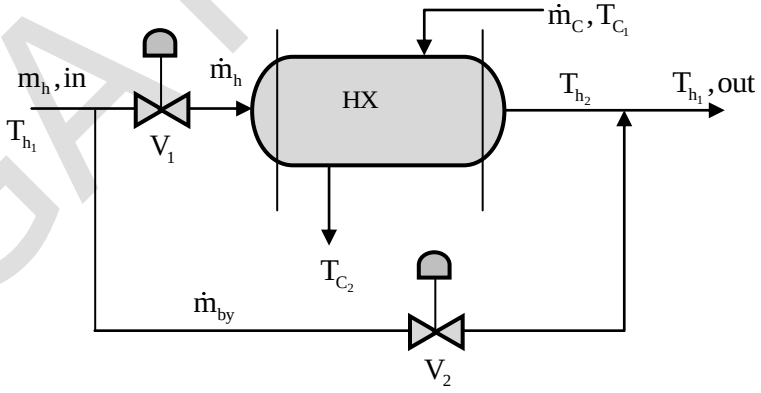

Desired temperature is achieved by manipulating values V_1 and V_2 according to a complementary split range arrangement.

Hence correct answer (C).

© All rights reserved by Thinkcell Learning Solutions Pvt. Ltd. No part of this booklet may be reproduced or utilized in any form without the written permission